ROAD VEHICLE MECHANICAL INSPECTION GUIDE

Update: August 2024

Québec

ROAD VEHICLE MECHANICAL INSPECTION GUIDE

Legal deposit — Bibliothèque et Archives nationales du Québec

ISBN: 978-2-550-92253-7 (PDF)

© Société de l'assurance automobile du Québec, 2024

All rights reserved for all countries.
Reproduction by any means and translation of any part of this document are prohibited without the authorization of the Société de l'assurance automobile du Québec.

Original text in French.

Foreword

As part of its road safety mandate, the Société de l'assurance automobile du Québec (SAAQ) has implemented a mechanical inspection program for road vehicles.

This guide sets forth the inspection procedures and standards applicable to most vehicles. Designed as a quick reference tool for mechanics and carrier enforcement officers, it describes mechanical inspection procedures as well as the minor and major defects most likely to be encountered.

The *Highway Safety Code* and the *Regulation respecting safety standards for road vehicles* served as the basis for the contents of this guide. We therefore encourage readers to consult the Code and Regulation for all legal questions.

We would like to thank the personnel at Contrôle routier Québec for their invaluable cooperation.

Mechanical inspection

The SAAQ has implemented various measures to protect the public against the risks inherent in use of the road, one of which is to ensure that vehicles travelling on Québec roads are mechanically safe. Therefore, certain types of vehicles are required to undergo a sporadic or periodic mechanical inspection.

Limits of the mechanical inspection

The mechanical inspection is a legal requirement. It consists of a visual inspection of the components listed in this guide. To find out about the general condition of your vehicle, we highly recommend that you also submit it to a mechanical inspection by your mechanic.

Table of Contents

General Information 6

Section 1

LIGHTS AND SIGNALS 7

1.1 Headlights, lights, reflectors and reflective materials 7
1.2 Electric cables, plugs, adapters, plug sockets, battery and switches 13
1.3 Inspection of headlight alignment 13
1.4 Required lighting and signals 17
1.5 Component and defect codes for the lights and signals 21

Section 2

STEERING SYSTEM 23

General Provisions 23
2.1 Steering wheel 24
2.2 Steering column and steering shaft joints 26
2.3 Steering box and rack-and-pinion 27
2.4 Steering linkage 28
2.5 Power steering 31
2.6 Steering knuckles 33
2.7 Ball joints 34
2.8 Component and defect codes for the steering system 35

Section 3

CHASSIS FRAME, UNDERBODY, LOAD SPACE AND COUPLING DEVICE 37

3.1 Chassis frame and underbody 37
3.2 Load space 41
3.3 Lifting or support device of a trailer or semi-trailer whose GVWR is 4,500 kg or more 41
3.4 Sliding bogie 41
3.5 Coupling plate 43
3.6 Kingpin 44
3.7 Turntable platform 44
3.8 Fifth wheel 45
3.9 Other coupling devices 50
3.10 Component and defect codes for the chassis frame, underbody, load space and coupling device 53

Section 4

SUSPENSION 55

General Provisions 55
4.1 Component and defect codes for the suspension 71

Section 5

BRAKES 73

General Provisions 73
5.1 Parking brake and service brake 74
5.2 Hydraulic brake system 75
5.3 Anti-lock brake system 80
5.4 Electric brake system (also known as an electromagnetic brake system) 81
5.5 Pneumatic brake system 82
5.6 Working order of the pneumatic brake system 84
5.7 Working order of the mechanical components of the pneumatic brake system 86
5.8 Disc brakes 92
5.9 Drum brakes 94
5.10 Component and defect codes for the brakes 96

Section 6

FUEL AND ENGINE CONTROL SYSTEMS 97

6.1 Fuel system 97
6.2 Engine control system 100
6.3 Component and defect codes for the fuel and engine control systems 101

Section 7

EXHAUST SYSTEM 103

7.1 Exhaust system 103
7.2 Component and defect codes for the exhaust system 106

Section 8

WINDOWS AND REARVIEW MIRRORS 107

8.1 Windows 107
8.2 Rearview mirrors 109
8.3 Component and defect codes for the windows and rearview mirrors 110

Section 9

ACCESSORIES 111

9.1 Sun visor 111
9.2 Horn 112
9.3 Windshield wipers and washer system 112
9.4 Heater and defroster 113
9.5 Neutral safety switch 113
9.6 Speedometer and odometer 113
9.7 Indicator lights and gauges in school buses 114
9.8 Retractable stop sign on school buses 114
9.9 Clutch control 114
9.10 First-aid kit 115
9.11 Chemical extinguisher 115
9.12 Crossing control arm on school buses 115
9.13 Component and defect codes for the accessories 116

Section 10

TIRES AND WHEELS 117

10.1 Tires 117
10.2 Wheels 121
10.3 Component and defect codes for the tires and wheels 126

Section 11

BODY 127

General Provisions 127
11.1 Engine hood or door 128
11.2 Cab 128
11.3 Bumpers 129
11.4 Passenger compartment doors 130
11.5 Doors or covers of load space or auxiliary compartments 130
11.6 Passenger compartment floor and steps 130
11.7 Load space 131
11.8 Air bags and seat belts 131
11.9 Seats and bench seats 132
11.10 Service and exit doors 132
11.11 Emergency exit 133
11.12 Interior equipment 134
11.13 Equipment for transporting persons with disabilities 134
11.14 Component and defect codes for the body 136

Appendix 1
Pressure Conversion Table 137

Appendix 2
Measurement Conversion Table 138

Appendix 3
Information on Glazing Materials 139

Appendix 4
Military-Type Road Vehicles 140

Appendix 5
Details Regarding SAE International's Standard J800 147

Alphabetical Index 148

English/French Glossary 149

French/English Glossary 150

Amendment History 151

Key

Vehicles

A pictogram above a text means that the provision applies to this category of vehicle only.

Passenger vehicles and light trucks only

Trailers and semi-trailers only

Straight-body trucks only

School buses and minibuses only

Motor coaches only

City buses only

Dump trucks only

Military trucks only

Defects

Minor defect

Major defect

General Information

Component and defect codes

The numeric and alphabetic codes presented in superscript refer to the components and defects. For example:

> The front wheels (33) are visibly out of alignment (MA**) (s. 110).
>
> ** Specify in the comments.

They are intended for carrier enforcement officers and road vehicle inspection agents, in particular to enter defects on the mechanical inspection certificates. A complete list of codes used in each section is provided at the end of that section as a courtesy translation. The French versions of these lists take precedence over the English versions in the event of any discrepancy between the two.

References to sections of the *Regulation respecting safety standards for road vehicles*

The number in parentheses that appears after each defect corresponds to the applicable section of the Regulation. For example:

> The front wheels (33) are visibly out of alignment (MA**) (s. 110).
>
> ** Specify in the comments.

Precedence of manufacturer's standards

The inspection procedures and compliance criteria described in this guide may not apply to certain vehicles. In such cases, one should refer to the manufacturer's standards, which shall take precedence. However, there is one exception: the specific rules established under the *Regulation respecting safety standards for road vehicles* that apply to military-type road vehicles cannot be substituted.

General provision

All of the equipment and every component covered in this guide must be adequate, that is, appropriate to its function and constantly kept in good working order. In certain cases, additional information is provided in the column entitled "Parts and Procedures" in order to determine whether equipment or components are adequate.

Measurement units

Imperial measures are indicated in parentheses for information purposes only and have no legal value.

Conditions for mechanical inspection

A road vehicle inspection agent must refuse to inspect a vehicle where dirt or other obstructing material (ice, grease, rust, etc.) prevents a complete visual inspection of all vehicle components from being carried out. The vehicle must be unloaded.

The client may clean the vehicle himself or herself and then come back for an inspection or, with the client's permission and at his or her expense, the agent may clean the dirt or obstructed components before proceeding with the inspection.

The agent must refuse to inspect a vehicle where the presence of a load or objects not permanently affixed to the vehicle prevent a complete visual inspection of the vehicle from being carried out.

The agent must refuse to inspect a vehicle with the mobile unit where the vehicle components are inaccessible (e.g. the cross members of a low bed platform) or if the vehicle is at an inappropriate location.

Safety rule

To ensure that the vehicle does not move unexpectedly during the inspection, wheel chocks must be placed in front of and behind the drive axle on the driver's side of the vehicle or, in the case of a tandem axle, between the axles. Put the gearshift lever in neutral, release the parking brake and turn the ignition switch to the "ON" position. Never go underneath a vehicle with its engine running.

Modified or hand-crafted vehicles

In certain cases, when processing files for modified or hand-crafted vehicles, the road vehicle inspection agent must complete a record that will be analyzed by those in charge at the Société de l'assurance automobile du Québec and fill out a mechanical inspection certificate.

Military-type road vehicles

The requirements and information specific to military-type road vehicles are presented in Appendix 4.

Deadline to repair a defect

Under section 531 of the *Highway Safety Code*, where a mechanical inspection certificate indicates that a road vehicle has a minor defect, the owner of the vehicle must make the necessary repairs, or have the repairs made, within 48 hours. At the expiry of that period, no person may put the vehicle back into operation unless it is proven, to the satisfaction of the SAAQ or a person authorized to perform vehicle inspections on its behalf, that the necessary repairs have been made.

Under section 354 of the *Highway Safety Code*, where a mechanical inspection certificate indicates that a road vehicle has a major defect, no person may put the vehicle back into operation unless it is proven, to the satisfaction of the SAAQ or a person authorized to perform vehicle inspections on its behalf, that the necessary repairs have been made.

Section 1

Lights and Signals

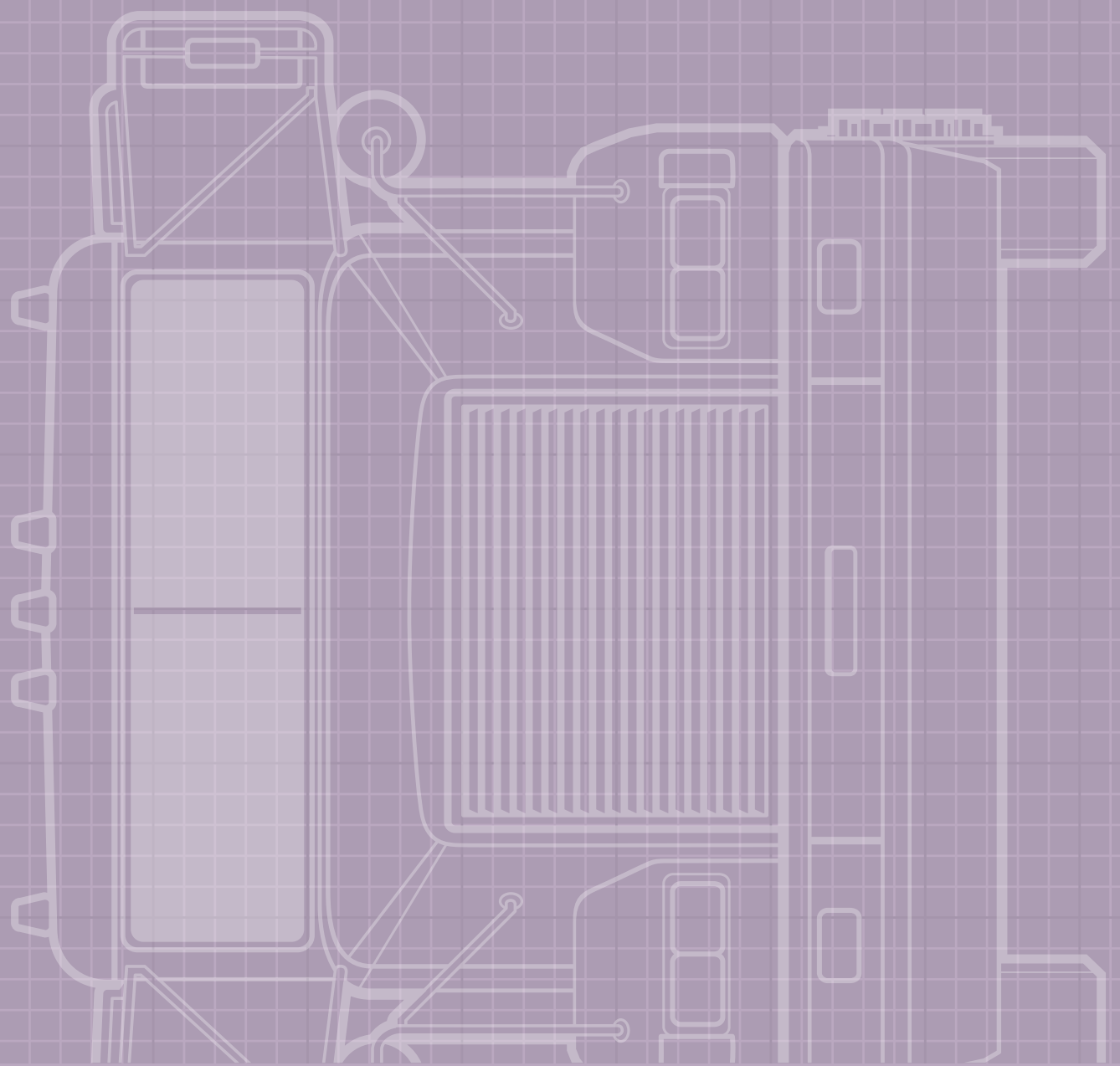

Lights and Signals

Parts and Procedures | Description of the Defect

1.1 Headlights, lights, reflectors and reflective materials (ss. 15, 18, 19, 20, 21, 22, 23, 24 and 163, par. (1))

Check the working order of the headlights and lights listed below by activating the appropriate control. Make sure the headlights and lights are firmly attached to their anchorage by gently pushing them in all directions.

Notes:

- Subject to restrictions expressly provided for in the *Highway Safety Code*, owners may install additional lights or headlights on their vehicle, provided those required by the Code are present and of the proper colour (e.g. yellow turn signal lights at the rear of semi-trailers that remain lit when they are not flashing). Furthermore, these additional lights or headlights are not required to be in good working order.
- A required light or headlight does not meet the manufacturer's standards if the lens is damaged in a way that lets water in, or if it is broken, discoloured, painted over or of the wrong colour.
- A headlight does not meet the manufacturer's standards where, for example, the two headlights are not of the same type.
- A headlight does not light up with the intensity intended by the manufacturer when, for example, the lens is tarnished to the point of considerably reducing the intensity of the light beam.
- The position and colour of the headlights and lights are indicated in the illustrations at the end of this section.
- If equipment installed on a vehicle blocks the vehicle's headlights, lights or reflectors, the vehicle or equipment must carry equivalent headlights, lights or reflectors in places where they are visible.
- A construction trailer exceeding 2.6 metres in width must at least carry, at the rear, two red taillights, two red stop lights and two red or amber turn-signal lights, at the same height, one on each side of the vertical centreline and as far apart as practicable. Detachable equipment may be used to replace those lights.

General Provisions

The road vehicle is not equipped (A) with the headlights, (1, 2) lights, (*) reflectors (8) or reflective material (20) required by the Code (s. 15).

A headlight, (1, 2) a light, (*) a reflector (8) or a reflective material (20) required by the Code is not securely mounted (CC) in the locations designed for that purpose (DD) (s. 15).

A headlight (1, 2) or a light (*) required by the Code does not comply with the manufacturer's standards (W**) (s. 15). (Does not apply to military-type road vehicles. Refer to Appendix 4 for the defect.)

A headlight, (1, 2) a light (*) or an indicator lamp (5*) does not light up (HH) with the intensity intended by the manufacturer (W**). In the case of a headlight (1, 2) that uses light emitting diodes (LEDs), less than 100% of the diodes are in working order and in the case of a light (*) that uses LEDs, 75% or less of the diodes are in working order (X**) (s. 15). (Special provisions apply to military-type road vehicles. Refer to Appendix 4.)

A lens (22*) is missing, (A) broken, (F) so damaged (N) as to let water in, discoloured, (J) painted over (MM) or of the wrong colour (X**) (s. 18).

A device or material is mounted or affixed to a road vehicle, a headlight, (1, 2) a light (*) or a lens (22) so as to hide or dim the light (LL) (s. 24).

* Specify which light is concerned.
** Specify in the comments.

Parts and Procedures	Description of the Defect
a) Headlights Check the working order of the high beams and low beams. If the vehicle is equipped with retracting headlight bases or headlight shutters, make sure they are working properly as well. Headlight alignment can be checked using either a screen, as described in Section 1.3, or with instruments that are specially designed or provided with the vehicle (levels). The colour of the headlights must be checked at a road vehicle inspection agent by projecting the light beam onto a white screen. The light projected onto the screen must be white.	The headlights (1, 2) are not aligned in accordance with the manufacturer's standards (W**) (s. 20). One of the headlights (1 2) is not white (W**) (s. 15). ** Specify in the comments. A retracting headlight base or a headlight shutter (4) does not open or does not move completely aside in the open position (R) when the headlights are on (s. 21). A retracting headlight base or a headlight shutter (4) does not remain secured in the fully open position (R) when the headlights are on (s. 21). The road vehicle is not equipped (A, GG, HH) with at least one adequate low beam (2) in good working order (s. 163, par. (1)).
b) Reflectors ***Notes:*** • Replacing rear and side reflectors (front, central and rear) with red and white DOT-C type reflective strips installed in compliance with Section 1.4 is only authorized on trailers and semi-trailers with an overall width of **2.05 m** (6 ft 8 in) **or more**, and whose gross vehicle weight rating is **4,536 kg** (10,000 lb) or more. • Replacing red reflectors with red and white DOT-C type reflective strips is authorized on truck tractors where the reflective strips cover the width of the detachable mudguard supports. • Central reflectors are required on vehicles with a length of 9.1 m (30 ft) or more. • If the reflectors are absent from the optical unit or clear, new red reflectors of the same dimensions as the original reflectors will have to be installed at the same height, on each side of the central vertical axis of the road vehicle, and be placed with as much space between them as possible.	The rear reflectors (8) are not red (X**) and placed with as much space between them as possible (DD) (s. 15). The rear side reflectors (8) are not red (X**) (s. 15). The front side and central reflectors (8) are not yellow (X**) (s. 15). ** Specify in the comments. A reflector (8) required by the Code is missing, (A) broken, (F) discoloured (J) or painted over (MM) (s. 18).

Parts and Procedures	Description of the Defect
c) Parking lights ***Notes:*** • Central parking lights are required on vehicles with a length of 9.1 m (30 ft) or more. • Side parking lights and clearance lights may be combined into one light if it is visible from the side and front or the side and rear, as the case may be. • Changing the rear optical units for optical units with clear lenses is acceptable provided that the colour of the lighting produced by the parking lights, the brake lights and the turn signal lights comply with regulatory requirements (see the illustrations at the end of this section).	The front parking lights (6) are not yellow or white (X**) (s. 15). The side front and central parking lights (6) are not yellow (X**) (s. 15). The rear and side rear parking lights (6) are not red (X**) (s. 15). ** Specify in the comments. A single-unit vehicle or the last vehicle in a combination of road vehicles is not equipped (A) with at least one rear parking light (6) in good working order (s. 163 par. (1.1)).
d) Brake lights Check to see if the lights are working properly by gently depressing the brake pedal. ***Note:*** If the vehicle is equipped with a centre stop lamp, it must be checked as well. Centre stop lamps are mandatory on passenger vehicles manufactured after January 1, 1987.	The brake lights (11) are not red (X**) (s. 15). ** Specify in the comments. A single-unit vehicle or the last vehicle in a combination of vehicles is not equipped (A, GG, HH) with at least one brake light (11) in good working order (s. 163 par. (1.1)).
e) Turn signal lights ***Notes:*** • Some cab-over trucks were manufactured with double-face turn signal lights located at the front and visible from the rear. These tractor vehicles are not required to be equipped with rear turn signal lights. • With regard to the indicator lamp, additional requirements apply to military-type road vehicles. (Refer to Appendix 4.)	The front turn signal lights (7) are not yellow or white (X**) (s. 15). The rear turn signal lights (7) are not yellow or red (X**) (s. 15). ** Specify in the comments. The turn signal indicator lamp (5*) does not work (HH) (s. 15). * Specify which indicator lamp in the comments. A single-unit road vehicle with a GVWR of 4,500 kg or more is not equipped (A, GG, HH) with at least (s. 163 par. (1.2)): - one turn signal light (7) at the rear right in good working order. - one turn signal light (7) at the rear left in good working order. The last vehicle in a combination of vehicles where such a vehicle has a GVWR of 4,500 kg or more is not equipped (A, GG, HH) with at least (s. 163 par. (1.2)): - one turn signal light (7) at the rear right in good working order. - one turn signal light (7) at the rear left in good working order.

Parts and Procedures	Description of the Defect
f) Hazard lights ***Note:*** With regard to the indicator lamp, additional requirements apply to military-type road vehicles. (Refer to Appendix 4.)	The indicator lamp (5*) does not work (HH) (s. 15). * Specify which indicator lamp in the comments.
g) Clearance lights ***Notes:*** • Where the rear identification lights are mounted at the very top of the road vehicle, the clearance lights need not be mounted in the upper right and left extremities. The front and rear clearance lights may be combined with the side marker lights on condition that they are visible from the side and front or the side and rear, as the case may be. • Clearance lights are not required at the rear of tractor trucks that do not have a load space. • Where clearance lights are installed on a replacement sun visor, they must be placed at the prescribed locations.	The clearance lights (9) at the front are not yellow, (X**) are not placed at the same height (DD) or are more than 15 cm (6 in) from the extremities of the vehicle (DD) (s. 15). The clearance lights (9) at the rear are not red, (X**) are not placed at the same height (DD) or are more than 15 cm (6 in) from the extremities of the vehicle (DD) (s. 15). ** Specify in the comments.
h) Identification lights ***Notes:*** • Identification lights are not required at the rear of road tractors that do not have a load space. • Identification lights built into a replacement sun visor must be placed at the prescribed locations. These lights are compliant where they are installed on the original sun visor by the vehicle's manufacturer. • Identification lights must be located at the top of the vehicle or lower if the upper cross member is less than 25 mm (10 in) high. On certain closed semi-trailers, however, the rear identification lights were not placed at the top of the vehicle by the manufacturer; in such a case, the location of the lights can be accepted. • Identification lights are not required at the rear of the tractor vehicle of an auto transporter-type of vehicle combination. • Identification lights may have dual intensity and be used as stop lights or turn-signal lights. However, to be considered compliant, identification lights must remain on at all times.	The identification lights (10) at the front are not yellow, (X**) are not grouped in a horizontal row at the centre (DD) and above the top of the windshield (DD) or are not spaced between 15 cm (6 in) and 30 cm (12 in) apart (DD) (s. 15). The identification lights at the rear (10) are not red, (X**) are not grouped in a horizontal row at the centre (DD) as close as possible to the top of the vehicle (DD) or are not spaced between 15 cm (6 in) and 30 cm (12 in) apart (DD) (s. 15). ** Specify in the comments.
i) Licence plate light ***Note:*** A licence plate light is only required where the licence plate is affixed to the rear of the vehicle.	The licence plate light (15) does not switch on (HH) (s. 15).

Parts and Procedures	Description of the Defect
j) Backup light ***Notes:*** • The backup light does not have to be controlled by the position of the vehicle's gearshift lever. • The backup light, which must be located at the rear of the vehicle, is not required for trailers and semi-trailers. • The backup light switch must be clearly identified if the light is not controlled by the position of the vehicle's gearshift lever. • Work lights on fuel tanks or rearview mirrors are not backup lights.	The backup light (14) does not switch on (HH) or is not white (X**) (s. 15). Where the backup light is activated by the gearshift lever, the light (14) does not switch off (IN**) when the gearshift lever is no longer in the reverse position (s. 15). ** Specify in the comments.
k) Dashboard lights ***Note:*** With regard to dashboard lights, additional requirements apply to military-type road vehicles. (Refer to Appendix 4.)	One of the lights in the dashboard (16) does not switch on (HH) (s. 22).
l) Daytime running lights ***Notes:*** • All vehicles manufactured after December 1, 1989 must be equipped with two white or yellow daytime running lights at the front. These lights may be independent or combined with the headlights (high beams or low beams) or the parking lights. • With regard to daytime running lights, additional requirements apply to military-type road vehicles. (Refer to Appendix 4.)	One of the daytime running lights (3) is inadequate (IN**) because it is not of the required colour or does not switch on (s. 19). ** Specify in the comments.
m) Interior lighting Check the lighting of the centre aisle, the entrance and exit steps and the boarding space.	One of the lights (17, 18) used for interior lighting does not switch on (HH) (s. 23).
n) Reflective materials ***Notes:*** • Refer to the illustrations at the end of this section for the location of the required reflective materials. • Reflective material that is severely damaged is considered non-compliant with the manufacturer's standards. • Except for trailers designed exclusively for dwelling purposes and construction trailers, all trailers and semi-trailers measuring **2.05 m** (6 ft 8 in) **or more** in width and having a gross vehicle weight rating of more than **4,536 kg** (10,000 lb) must be equipped with reflective materials in accordance with the *Motor Vehicle Safety Act*.	One of the reflective materials (20) required by the Code is missing, (A) severely damaged (N) or does not cover the required length (X**) (s. 15). ** Specify in the comments.

Parts and Procedures	Description of the Defect
• Replacing rear and side reflectors (front, central and rear) with red and white DOT-C type reflective strips installed in compliance with Section 1.4 is only authorized on trailers and semi-trailers with an overall width of **2.05 m** (6 ft 8 in) **or more**, and whose gross vehicle weight rating is **4,536 kg** (10,000 lb) or more. • Replacing red reflectors with red and white DOT-C-type reflective strips is authorized for tractor trucks where the reflective strips cover the width of the detachable mudguard supports. • In certain cases, a series of reflectors is affixed to the vehicle so as to replace the reflective materials. The centre of each reflector must be located at no more than 100 mm (4 in) from the centre of the adjacent reflector. • In the case of extendable semi-trailers, it is not necessary for the reflective strip to be installed on the retractable section or the internal section of the side rail. However, the strip must be applied, either in a single length or at equal intervals, over at least half of the length of the semi-trailer in the open position (fully extended). • School buses are not required to have reflective strips; however, if they do, the strips must be yellow. • Construction trailers exceeding 2.6 metres in width and travelling at night must be equipped, on each of the longest sides, with reflective material, in accordance with standards prescribed by a regulation made pursuant to the *Motor Vehicle Safety Act* with regard to trailers referred to in the regulation.	
o) Flashing red lights, alternately flashing yellow lights and alternately flashing red lights on school buses Check the working order of the flashing red lights and the alternately flashing yellow lights located at the upper front and upper rear of the school bus, as well as the alternately flashing red lights on the extendable stop sign. ***Note:*** School buses manufactured after August 28, 2005 must be equipped with alternately flashing yellow lights.	A flashing red light, (13) an alternately flashing yellow light (26) or an alternately flashing red light is missing, (A) not of the required colour, (X**) does not switch on (HH) or does not flash (R) (ss. 15 and 75). The indicator lamp (5*) does not switch on (HH) (s. 15). ** Specify in the comments. * Specify which indicator lamp in the comments.

1.2 Electric cables, plugs, adapters, plug sockets, battery and switches (ss. 16, 17 and 77)

Check the parts that are visible without removal and by activating the switches for the different circuits, if applicable.

An electric cable, (21) a plug, (25) an adaptor, (25) a plug socket (25) or a switch is (19) is broken, (F**) abraded, (WW) cracked, (Q**) corroded or worn (WW**) in a way that impedes the good working order of the component linked to it (s. 17).

** Specify "impedes the good working order" in the comments.

A component (*) is not securely mounted (CC) to its anchorage (s. 17).

* Specify which component in the comments.

An electric cable (21) that is not grounded is not covered with a protective and insulating sheathing (X**) (s. 17).

** Specify in the comments.

The operation of one circuit (*) interferes (AF**) with the operation of another circuit (s. 16).

* Specify which circuit in the comments.
** Specify in the comments.

The battery (24) is not securely mounted (CC) or one of its terminals (24) is excessively covered with corrosion deposits (NA**) that could prevent it from working properly (s. 77).

** Specify "impedes the good working order" in the comments.

The cover (23) of the battery, if the vehicle is so equipped by the manufacturer, is inadequate (IN**) or not securely fixed (CC) (s. 77).

** Specify in the comments.

1.3 Inspection of headlight alignment (s. 20)

1.3.1 Screen method (without a special instrument to check headlight alignment)

Inspect headlight alignment using a screen as indicated below:

1. Place the vehicle so that it is facing the screen and the headlights are directly above a painted line on the floor.
2. Align the centre of the vehicle with the line drawn down the centre of the screen:
   a. Mark the centre of the windshield and rear window with masking tape. It is not necessary to mark the windshield if the vehicle has a hood ornament.

b. Look through the centre of the rear window and adjust the position of the vehicle so that these two points are aligned with the centre line on the screen.

c. Measure the distance from the ground to the centre of the headlight lenses and transpose this measurement onto the screen so as to obtain the horizontal line from the centre of the headlights.

d. Measure the distance between the centre of headlight lenses and transpose half of this distance onto the screen on each side of the centre line so as to obtain the vertical lines from the centre of the headlights.

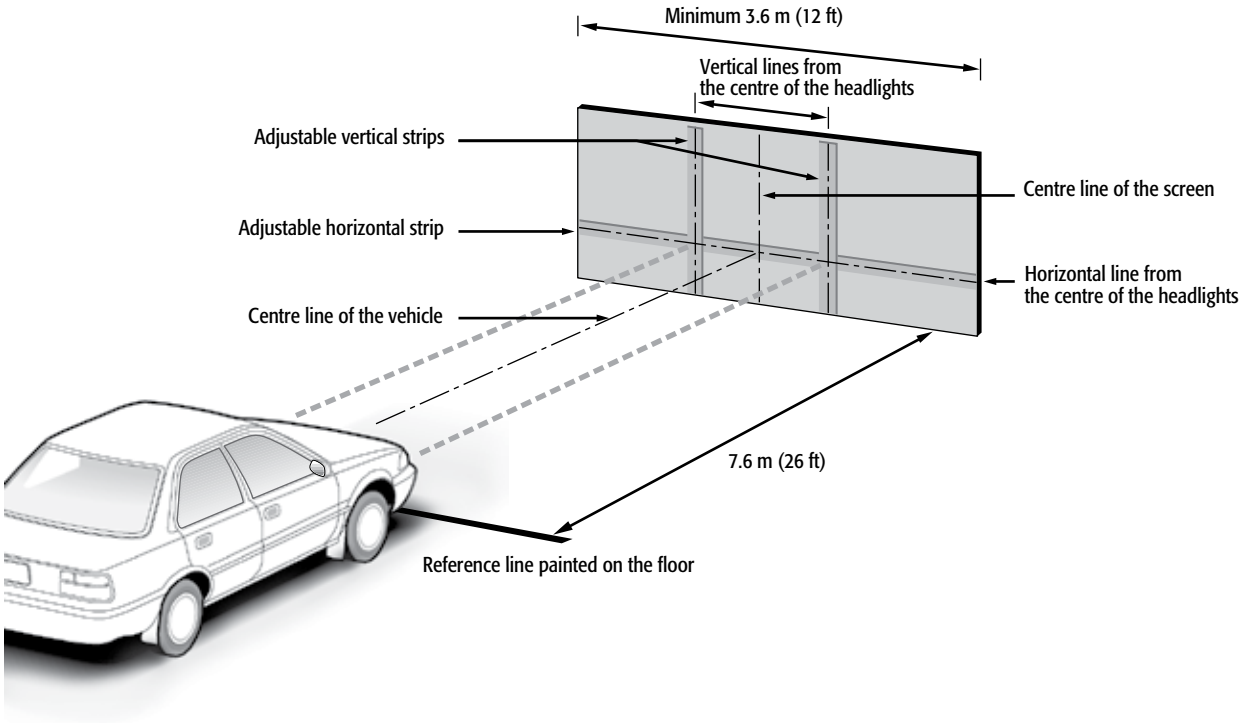

Notes:

- If a special instrument is used to check headlight alignment, it must be used as directed by the manufacturer.
- If the vehicle is equipped with adaptive headlights, the angle of the steering wheel must be neutral.

1.3.2 High beams

With the vehicle correctly positioned, switch the headlights on to the high beam position and check the centre of the high-intensity zone on the screen.

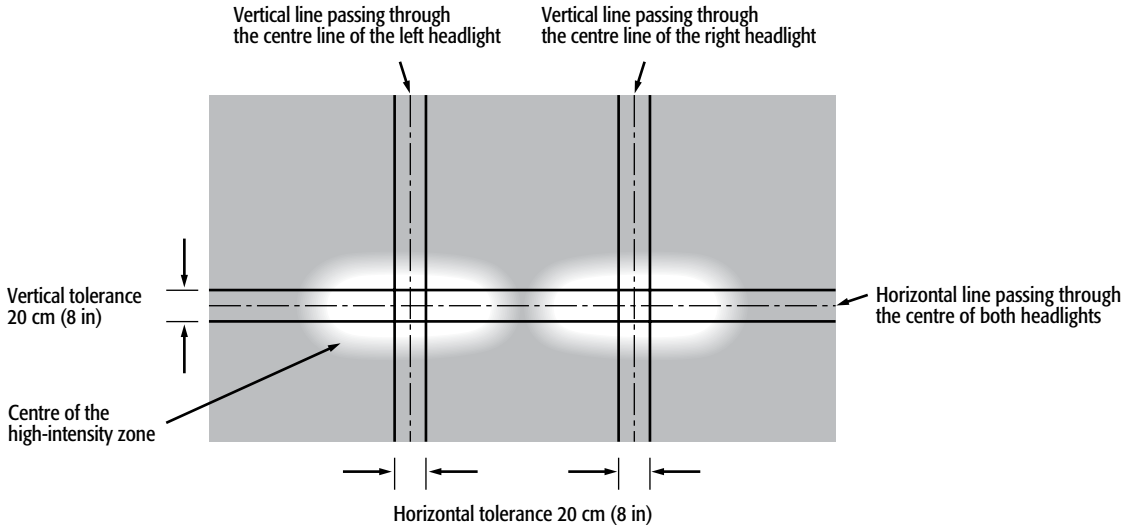

a) Horizontal alignment

b) Vertical alignment

Alignment of the high beams (1) does not satisfy the following values (L**) (s. 20):

- The centre of the high-intensity zone is more than 10 cm (4 in) on the left or right of the vertical line passing through the centre of both headlights.
- The centre of the high-intensity zone is more than 10 cm (4 in) above or below the horizontal line passing through the centre of both headlights.

** Specify in the comments.

1.3.3 Low beams

With the vehicle correctly positioned, switch the headlights on to the low beam position and check the centre of the high-intensity zone on the screen.

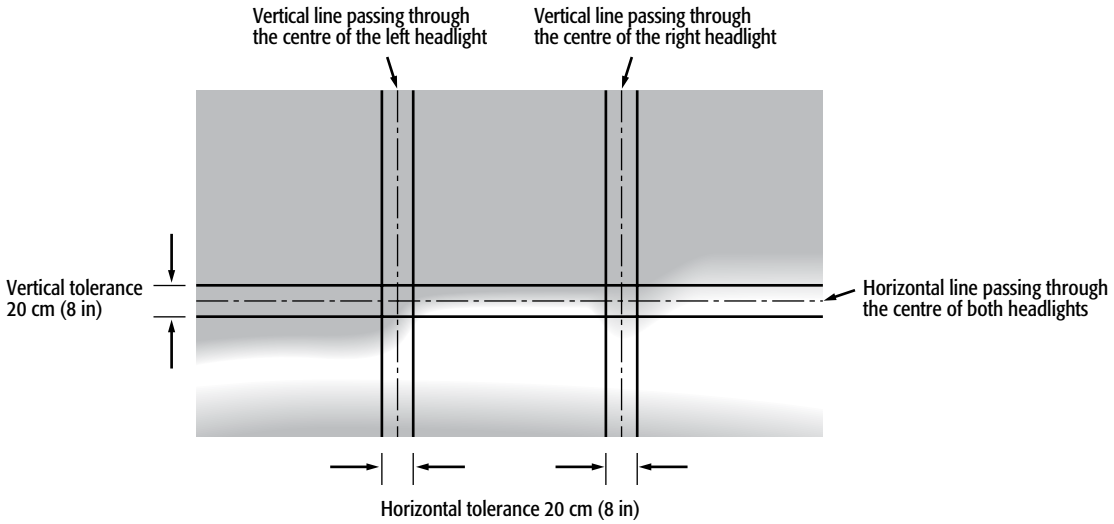

a) Horizontal alignment

b) Vertical alignment

Alignment of the low beams (2) does not satisfy the following values (L**) (s. 20):

- The left extremity of the high-intensity zone is more than 10 cm (4 in) on the left or right of the vertical line passing through the centre of the headlight.
- The upper extremity of the high-intensity zone is more than 10 cm (4 in) above or below the horizontal line passing through the centre of both headlights.

** Specify in the comments.

1.4 Required lights and signals

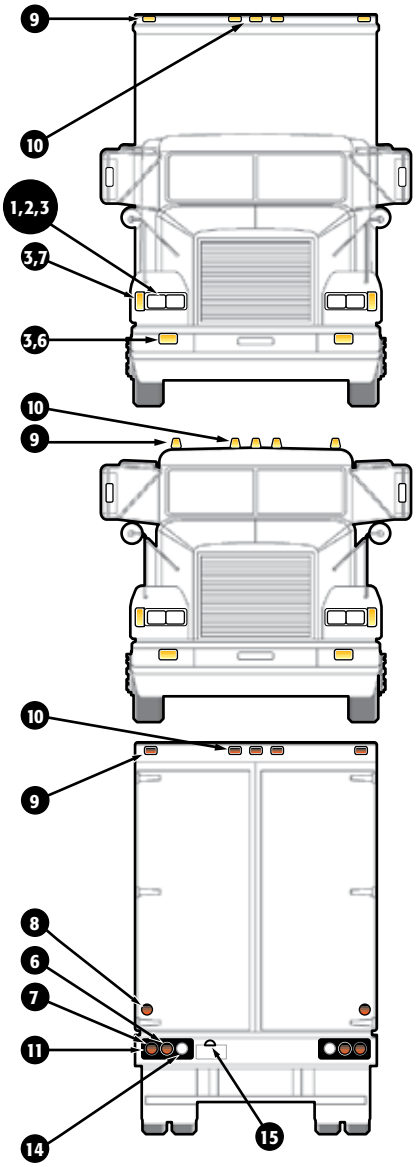

1,2. Headlights (high beams and low beams)
3. Daytime running lights
6. Parking lights
- ◆ - Front (yellow or white)
- Side front (yellow)
- ■ - Side centre (yellow)
- Rear (red)
- Side rear (red)

7. Turn signal lights
- Front (yellow or white)
- Rear (yellow or red)

8. Reflectors
- Front (yellow)
- Side front (yellow)
- ■ - Side centre (yellow)
- Rear (red)
- Side rear (red)

● **9.** Clearance lights
- Front (yellow)
- Rear (red)

● **10.** Identification lights
- ▲ - Front (yellow)
- Rear (red)

11. Brake lights (red)
14. Backup light (white)
15. Licence plate light (white)

◆ *Required at the front for vehicles 2.03 m (6 ft 6 in) wide or less.*
● *Required for vehicles wider than 2.03 m (6 ft 6 in).*
▲ *At the front, these lights must be mounted above the top edge of the windshield.*
■ *Required for single-unit vehicles 9.10 m (30 ft) long or longer.*

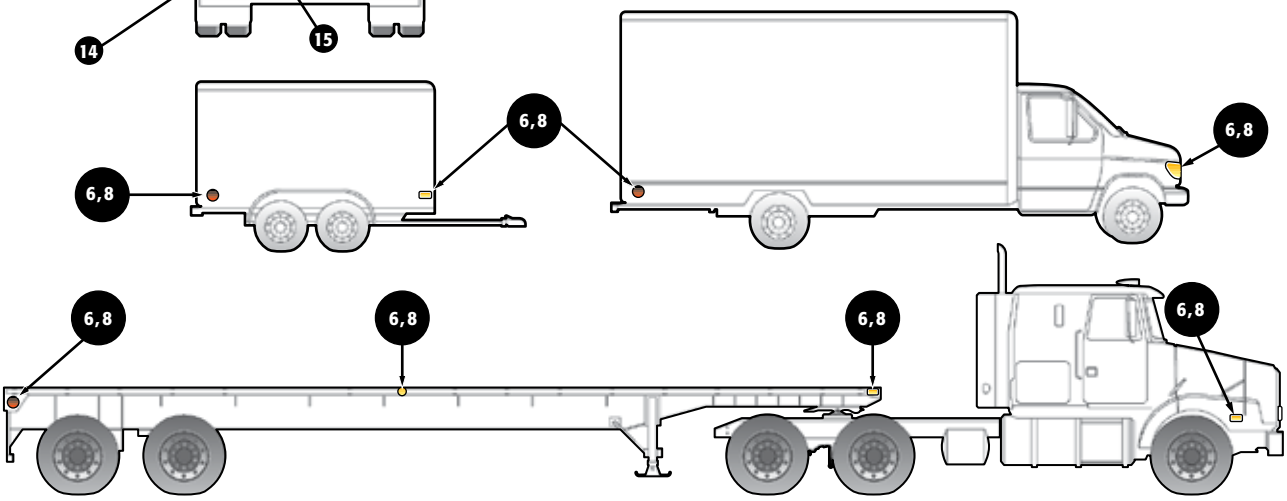

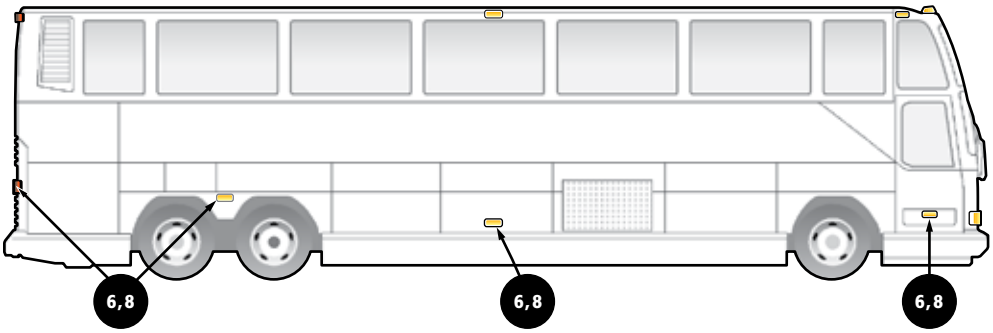

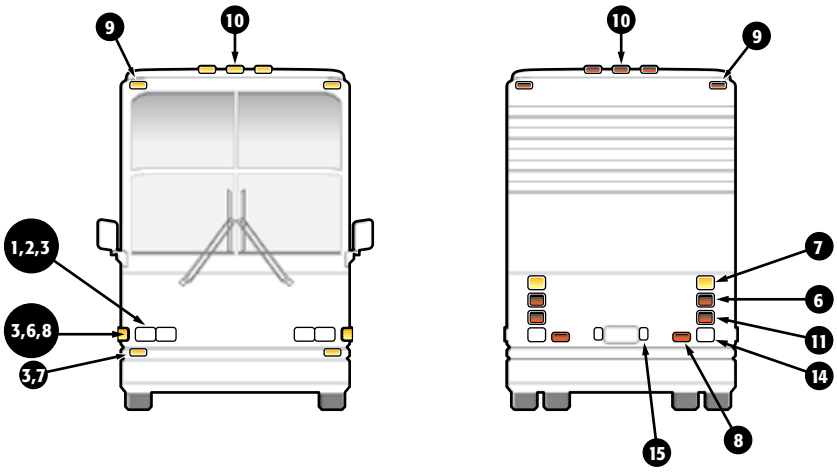

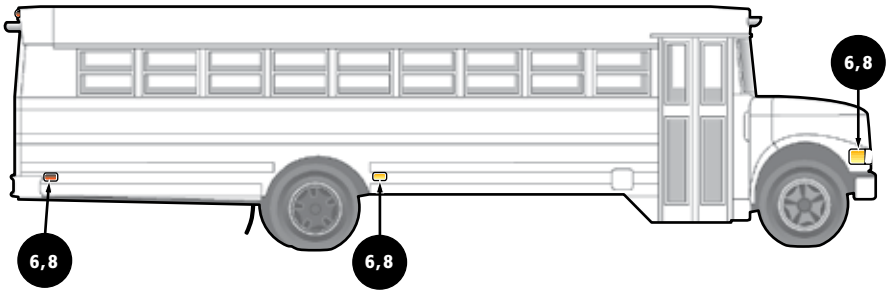

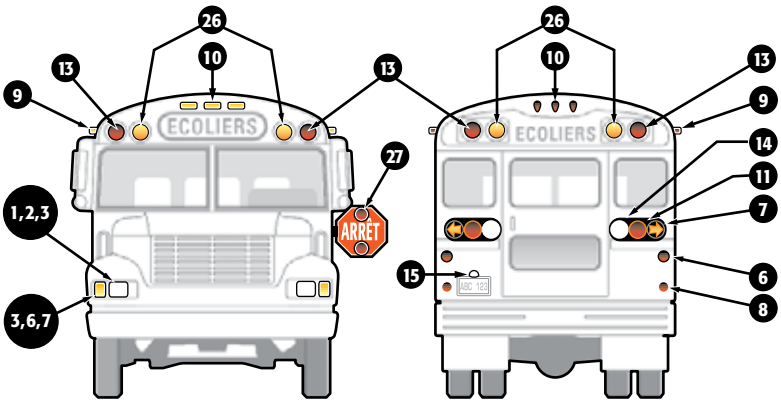

1,2. Headlights (high beams and low beams)
3. Daytime running lights
6. Parking lights
- ◆ - Front (yellow or white)
- Side front (yellow)
- ■ - Side centre (yellow)
- Rear (red)
- Side rear (red)

7. Turn signal lights
- Front (yellow or white)
- Rear (red or yellow)

8. Reflectors
- Front (yellow)
- Side front (yellow)
- ■ - Side centre (yellow)
- Rear (red)
- Side rear (red)

● **9.** Clearance lights
- Front (yellow)
- Rear (red)

●**10.** Identification lights
- ▲ - Front (yellow)
- Rear (red)

11. Brake lights (red)
13. Flashing red lights
14. Backup light (white)
15. Licence plate light
26. Alternately flashing yellow lights
27. Alternately flashing red lights

◆ *Required at the front for vehicles 2.03 m (6 ft 6 in) wide or less.*
● *Required for vehicles wider than 2.03 m (6 ft 6 in).*
▲ *At the front, these lights must be mounted above the top edge of the windshield.*
■ *Required for single-unit vehicles 9.10 m (30 ft) long or longer.*

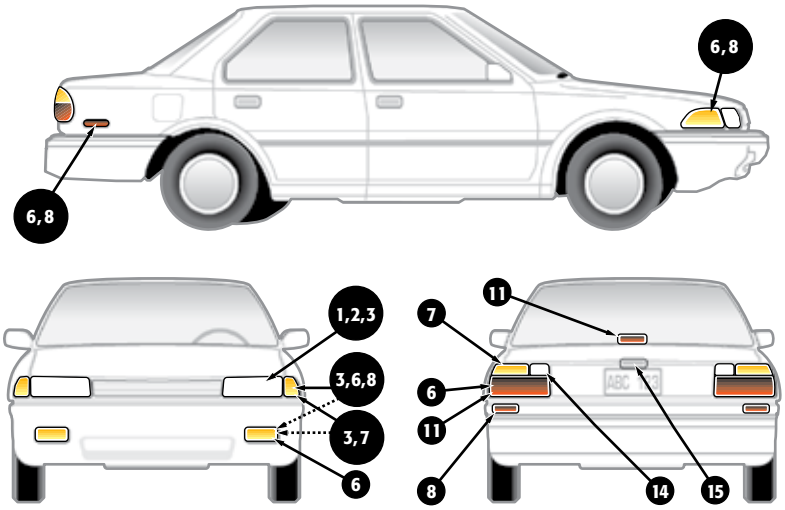

1,2. Headlights (high beams and low beams)
3. Daytime running lights
6. Parking lights
- Front (yellow or white)
- Side front (yellow)
- Rear and side rear (red)

7. Turn signal lights
- Front (yellow or white)
- Rear (yellow or red)

8. Reflectors
- Front (yellow)
- Side front (yellow)
- Rear (red)
- Side rear (red)

11. Brake lights (red)
14. Backup light (white)
15. Licence plate light

Reflective strips on trailers and semi-trailers with a GVWR of more than 4,536 kg (10,000 lb) and an overall width of 2.05 m (6 ft 8 in) or more

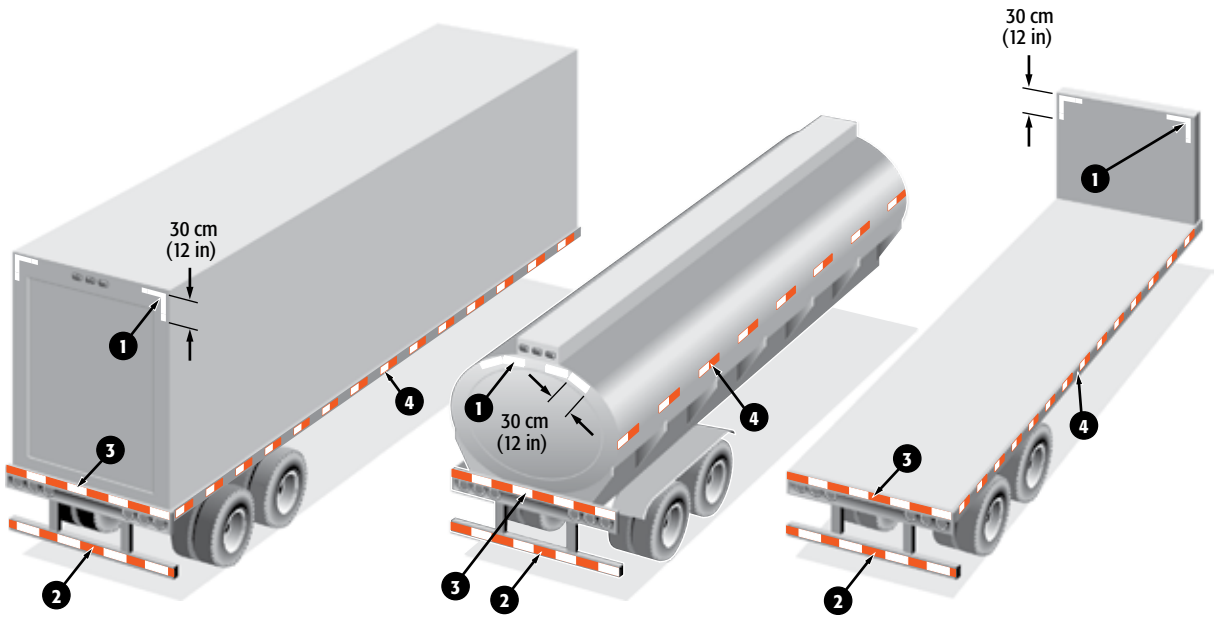

Location of Reflective Strips	Height	Colour
1. Upper rear-facing corners	At the top	White
2. Horizontal surface of the rear bumper bar, on its entire width, facing the rear	No requirement	White and red
3. At the rear, across the trailer's entire width, facing the rear	As horizontal as possible and, as closely as possible, between 375 mm (14 ¾ in) and 1,525 mm (5 ft) from the ground	White and red White and yellow Solid white Solid yellow
4. On each side, facing sideward, in a continuous line or evenly divided segments over at least half of the vehicle's length, starting and ending as close as possible to the vehicle's extremities	As horizontal as possible and, as closely as possible, between 375 mm (14 ¾ in) and 1,525 mm (5 ft) from the ground	White and red White and yellow Solid white Solid yellow

1.5 Component and defect codes for the lights and signals

COMPONENT	DEFECT
1 – High beam	A – Absent/Missing/Not equipped
2 – Low beam	F – Broken
3 – Daytime running light	J – Discoloured
4 – Retracting headlight base/Shutter	L – Maladjusted
5 – Indicator lamp	N – Damaged
6 – Parking light	Q – Cracked/Grooved
7 – Turn signal light	R – Does not work properly
8 – Reflector	W – Does not comply with manufacturer's standards
9 – Clearance light	X – Does not comply with regulatory standards
10 – Identification light	AE – Risk of rupture/Separation
11 – Brake light	AF – Causes interference
12 – Hazard light	CC – Not securely mounted
13 – Flashing red lights	DD – Improperly located
14 – Backup light	GG – Does not work
15 – Licence plate light	HH – Does not come on
16 – Dashboard light	IN – Inadequate
17 – Central aisle light	LL – Blocked
18 – Entrance step light	MM – Painted over
19 – Switch	NA – Corroded
20 – Reflective material	WW – Worn
21 – Electric cable	
22 – Lens	
23 – Battery compartment cover	
24 – Battery	
25 – Plug/Adaptor/Connector/Electrical outlet	
26 – Alternately flashing yellow lights	
27 – Alternately flashing red lights	

Section 2

Steering System

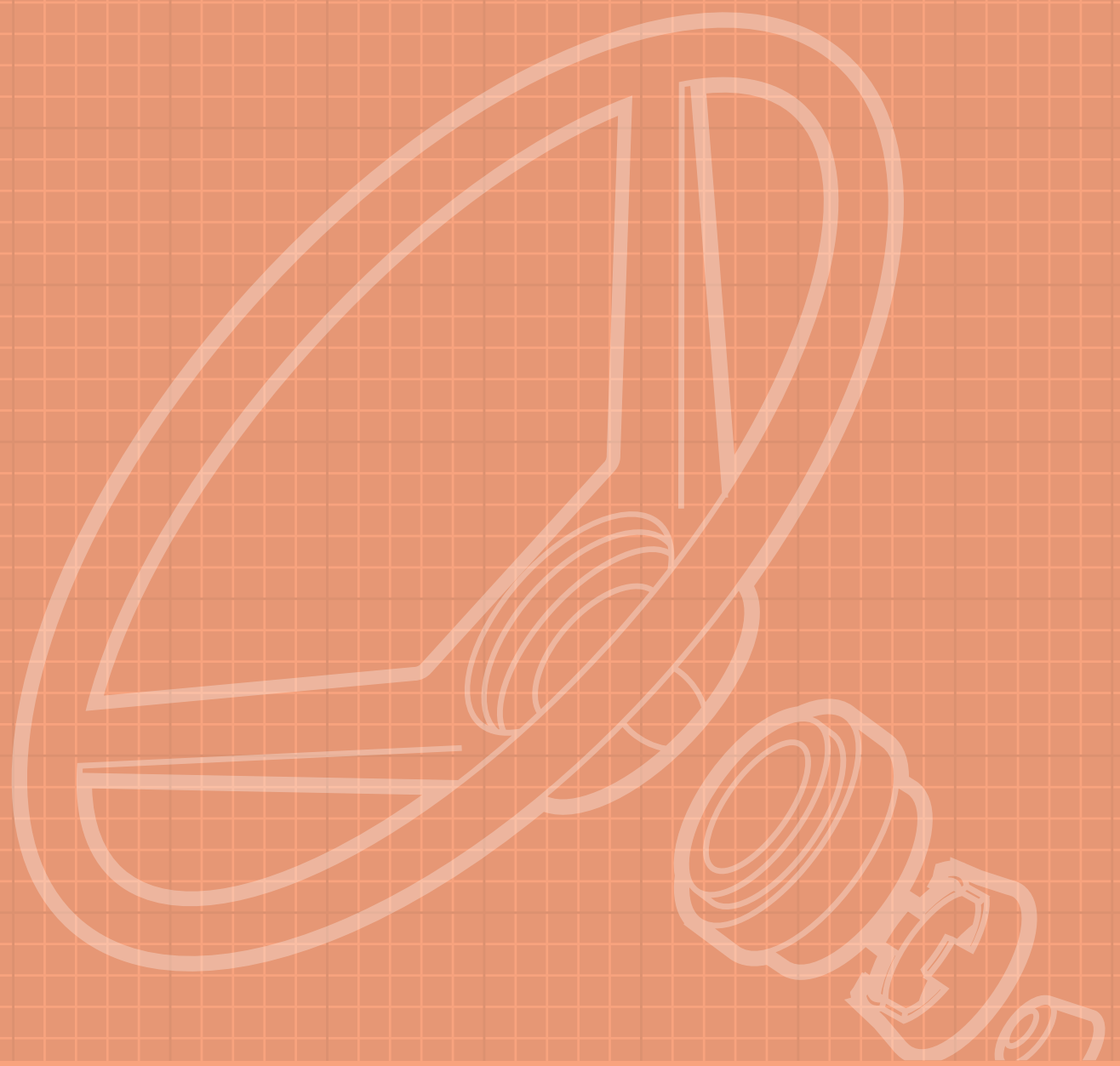

Steering System

Parts and Procedures	Description of the Defect

General Provisions (ss. 103, 104, 109 and 110)

Inspect the various components of the steering system.

Note:
Make sure the the wheels are on the ground and in the straight-ahead position when checking the alignment.

A steering component, (*) including parts of the self-steering axle, (*) is deteriorated, (WA**) damaged, (N**) or worn (WW**) in a way that hampers the handling of the road vehicle, or cracked, (Q) broken, (F) not securely mounted, (CC) displaced, (EA) bent, (K) missing (A) or modified (FF) (s. 103).

* Indicate the component number in the comments.
** Specify "in a way that hampers the handling" in the comments.

The front wheels (33) are visibly out of alignment (MA**) (s. 110).

** Specify in the comments.

A steering component (*) was repaired in a way that no longer ensures the same conditions of safety as those intended by the manufacturer (W**) (s. 104).

* Indicate the component number in the comments.
** Specify in the comments.

A mounting component (34*) of the steering is missing, (A**) cracked (Q**) or broken (F**) (s. 167, par. (1)).

* Specify which component in the comments.
** Specify "risk of separation" in the comments.

Single steering axle

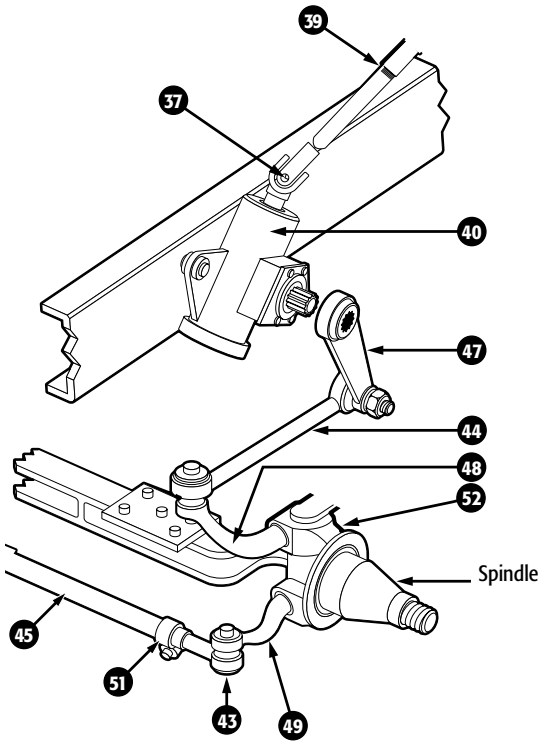

37. Coupling/cross and roller universal joint
39. Slip joint
40. Steering box
43. Tie rod end
44. Drag link
45. Tie rod
47. Pitman arm
48. Steering arm
49. Knuckle arm
51. Adjusting sleeve
52. Steering knuckle

2.1 Steering wheel (ss. 103, 106, 107, 109 and 167)

a) Maximum play

Note:

If the vehicle is equipped with power steering, the engine must be running.

1. Place the wheels in the straight-ahead position.

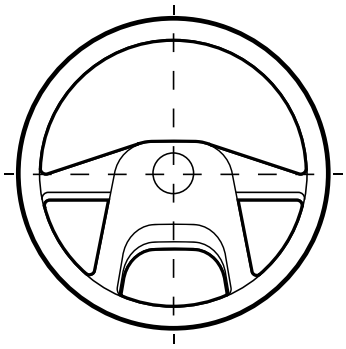

2. Turn the steering wheel in one direction until the front wheels move. Choose a reference point (e.g. the turn signal light switch arm) and mark off the steering wheel.

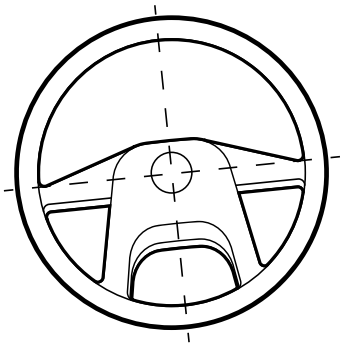

3. Turn the steering wheel slightly in the opposite direction until the wheels move. Measure the distance between the mark on the steering wheel and the reference point from Step 2.

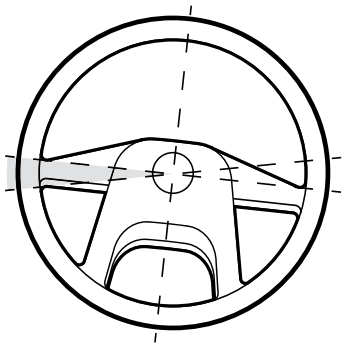

For a vehicle whose gross vehicle weight rating is less than 4,500 kg (9,921 lb):

- Play of 51 mm (2 in) (Z**) for power steering (33) (s. 107, par. (1)).
- Play of 75 mm (3 in) (Z**) for standard steering (33) (s. 107, par. (1)).
- Play of 10 mm (3/8 in) (Z**) for rack-and-pinion steering, (33) power or not (s. 107, par. (1)).

** Indicate the measurement in the comments.

- Play of 60 mm (2 3/8 in) (AA**) for power steering (33) (s. 167, par. (7)).
- Play of 87 mm (3 1/2 in) (AA**) for standard steering (33) (s. 167, par. (7)).
- Play of 15 mm (5/8 in) (AA**) for rack-and-pinion steering (33) (s. 167, par. (7)).

** Indicate the measurement in the comments.

For a vehicle whose gross vehicle weight rating is 4,500 kg (9,921 lb) or more:

Power steering:

- Play of 75 mm (3 in) (Z**) where the diameter of the steering wheel (33) is 500 mm (20 in) or less (s. 107, par. (2)).
- Play of 87 mm (3 ½ in) (Z**) where the diameter of the steering wheel (33) exceeds 500 mm (20 in) (s. 107, par. (2)).

** Indicate the measurement in the comments.

- Play of 87 mm (3 ½ in) (AA**) where the diameter of the steering wheel (33) is 500 mm (20 in) or less (s. 167, par. (7)).
- Play of 100 mm (4 in) (AA**) where the diameter of the steering wheel (33) exceeds 500 mm (20 in) (s. 167, par. (7)).

** Indicate the measurement in the comments.

Parts and Procedures	Description of the Defect
	Standard steering: Play of 87 mm (3 ½ in) (Z**) where the diameter of the steering wheel (33) is 500 mm (20 in) or less (s. 107, par. (2)). Play of 100 mm (4 in) (Z**) where the diameter of the steering wheel (33) exceeds 500 mm (20 in) (s. 107, par. (2)). ** Indicate the measurement in the comments. Play of 140 mm (5 ½ in) (AA**) where the diameter of the steering wheel (33) is 500 mm (20 in) or less (s. 167, par. (7)). Play of 196 mm (7 ¾ in) (AA**) where the diameter of the steering wheel (33) exceeds 500 mm (20 in) (s. 167, par. (7)). ** Indicate the measurement in the comments.
b) Mounting and anchorage of the steering wheel Check the mounting by pulling and pushing the steering wheel in all directions; if the vehicle is equipped with an adjustable steering wheel, check the working order of the adjustment mechanism.	The steering wheel (35) is not securely mounted (CC) (s. 103). The steering wheel (36) does not remain in set position (GG**) (adjustable steering wheel) (s. 103). ** Specify "does not remain in set position". The steering wheel (35) moves from its normal position and there is a risk of separation (AE) (s. 167, par. (1)).
c) Condition of the steering wheel Visually inspect the condition of the steering wheel.	The original steering wheel (35) has been replaced with a steering wheel with an outside diameter of less than 30 cm (12 in) or an irregular surface (W**) (s. 109). ** Specify in the comments. The steering wheel (35) is warped, (K) cracked, (Q) broken, (F) or modified (FF) (ss. 103, 109).

Parts and Procedures	Description of the Defect

2.2 Steering column and steering shaft joints (ss. 103, 105, 106 and 167)

a) Mounting and anchorage of the steering column

Check the mounting and anchorage of the steering column by pulling and pushing on the steering wheel in all directions.

The steering column (38) is not securely fixed (CC) (s. 105, par. (1)).

A bolt (34*) is missing (A) or loose (EE) (s. 105, par. (2)).

* Specify "in the steering column" in the comments.

The steering column (38) moves from its normal position and there is risk of separation (AE) (s. 167, par. (1)).

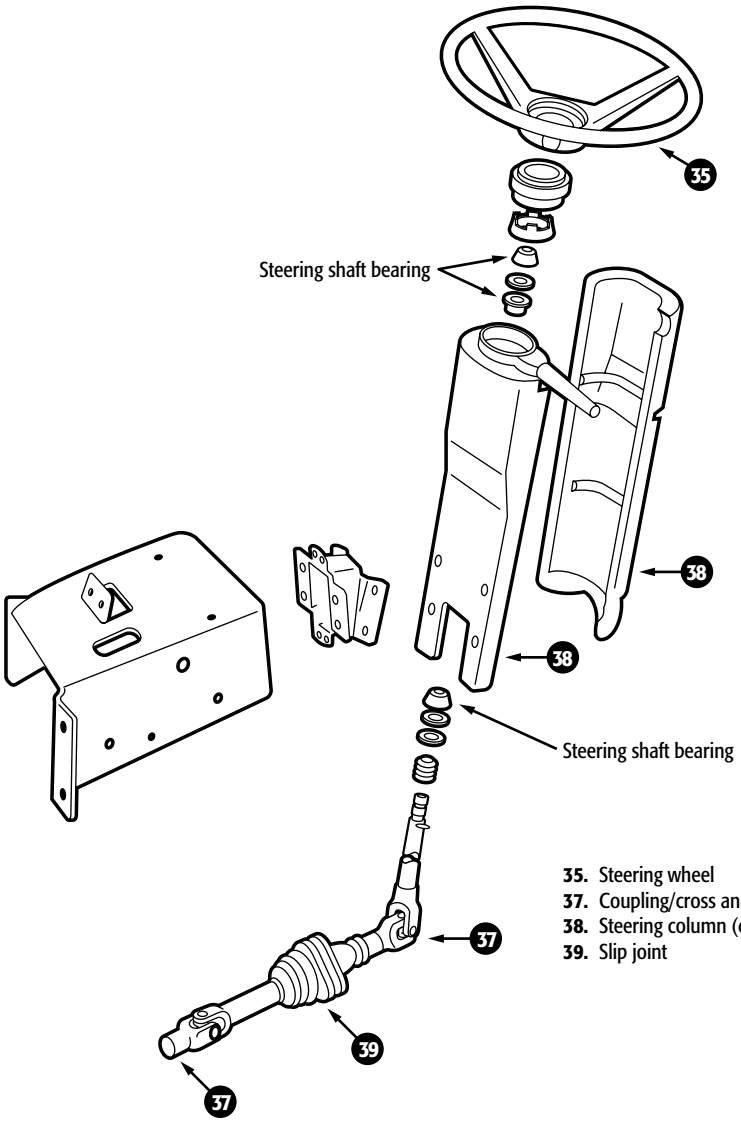

35. Steering wheel
37. Coupling/cross and roller universal joint
38. Steering column (casing that covers the steering shaft)
39. Slip joint

b) Steering shaft couplings and slip joints

Check the play in the steering shaft couplings and slip joints.

Steering shaft coupling (37)

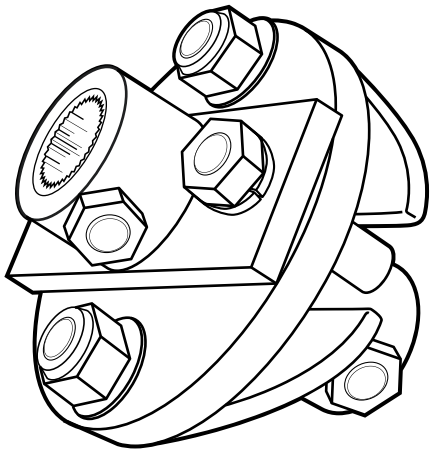

Cross and roller universal joint (37)

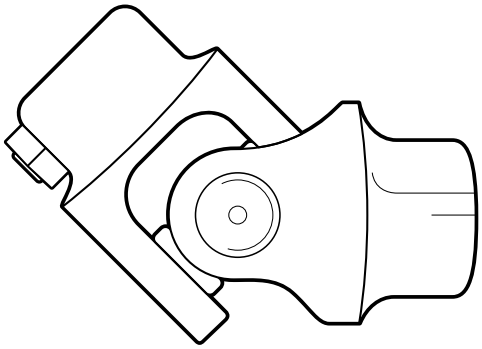

A steering shaft coupling (37) has play, (Z**) is damaged (WA) or shows signs of repair by welding (RR) (s. 105, par. (3)).

** Specifiy "during twisting motions" in the comments.

A steering shaft slip joint (39) has rotation play (Z**) greater than 1.2 mm (0.05 in) between the grooves or horizontal or vertical play of more than 6.4 mm (1/4 in) (s. 105, par. (4)).

** Indicate the measurement in the comments.

The energy-absorbing system (39) of the steering column is damaged (N) or modified (FF**) (s. 105, par. (5)).

** Specify in the comments.

A steering shaft coupling (37) or slip joint (39) shows a risk of imminent rupture (AE) (s. 167, par. (2)).

2.3 Steering box and rack-and-pinion (ss. 108, 109 and 167)

If the vehicle is equipped with power steering, the engine should be running, the fluid in the reservoir at the level recommended by the manufacturer and the belt tight enough so that it does not slip.

- Turn the steering wheel to the left and to the right all the way to each stop.
- Check to make sure the steering box or rack-and-pinion is securely mounted.

The steering box (40) or rack-and-pinion (57) is not securely fixed to the vehicle (CC) (s. 105, par. (1)).

There is an oil leak (T) other than slight oozing (40, 57) (s. 108).

There is a difference of more than one-half turn between the number of turns required to bring the steering wheel (33) from the centre to the left and right stops (BB**) (s. 109).

** Specify in the comments.

Parts and Procedures	Description of the Defect
• Count the number of turns required to bring the steering wheel from the centre to each stop (left and right). • Check the clearance between the tires and the chassis, body and steering linkage in every position. ***Note:*** Straight-body trucks should not be loaded during this inspection; otherwise, the inspection should be performed with the front of the vehicle partially lifted or while driving forward very slowly during the inspection.	There is not a clearance (X**) of at least 25 mm (1 in) between the tire and the chassis, body or steering linkage in every position (33) (s. 109). ** Explain and indicate the measurement in the comments. A steering stop (56) is missing (A) (s. 109). There is play (BB**) of more than 6.4 mm (¼ in) between the steering stop (56) and its contact point when the steering wheel is fully turned (s. 109). ** Indicate the measurement in the comments. The steering box (40) or rack-and-pinion (57) moves from its normal position and there is a risk of separation (AE) (s. 167, par. (1)).

2.4 Steering linkage (ss. 103, 104, 106, 114 and 167)

Perform the following inspections with the wheels on the ground: • Position the wheels in the straight-ahead position. • Turn the steering wheel in both directions until the wheels move. • Check the condition of all steering linkage components. • Check the play in the ball joint in the direction of movement (turn the steering wheel from left to right until the wheels move) or of the force applied (apply up and down or left to right movements with your hand only in the vertical or horizontal direction of the axis). ***Manual inspection of the ball joints*** 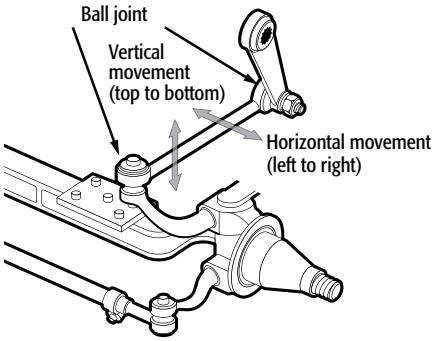 ***Note:*** A connector is a component that links two parts, e.g. a bolt that connects the drag link to the Pitman arm.	A mounting component (34*) is bent (K) or has been repaired by means of welding (RR) (s. 103). * Specify the component in the comments. A steering linkage component (*) is damaged (WA) in a way that hampers the handling of the road vehicle, or is bent (K) or inadequate (IN**) (s. 103). * Indicate the component number in the comments. ** Specify in the comments. There is play (Z) in the direction of the movement or of the force applied on a steering coupling (43) or connection (*) (s. 106). * Indicate the component number in the comments. A component of the steering linkage (*) is cracked, (Q) broken (F) or repaired with welds (RR) (s. 167, par. (5)). * Indicate the component number in the comments. A component of the steering linkage (*) is so damaged (N**) or not securely mounted (CC**) as to affect the parallelism of the wheels (s. 167, par. (5)). * Indicate the component number in the comments. ** Specify "as to affect the parallelism of the wheels" in the comments. A ball joint (*) of the steering linkage has play (AA**) exceeding 3.2 mm (1/8 in) in the direction of movement or force applied (s. 167, par. (6)). * Indicate the component number in the comments. ** Indicate the measurement in the comments.

Ball joint locked with slotted nut and cotter pin

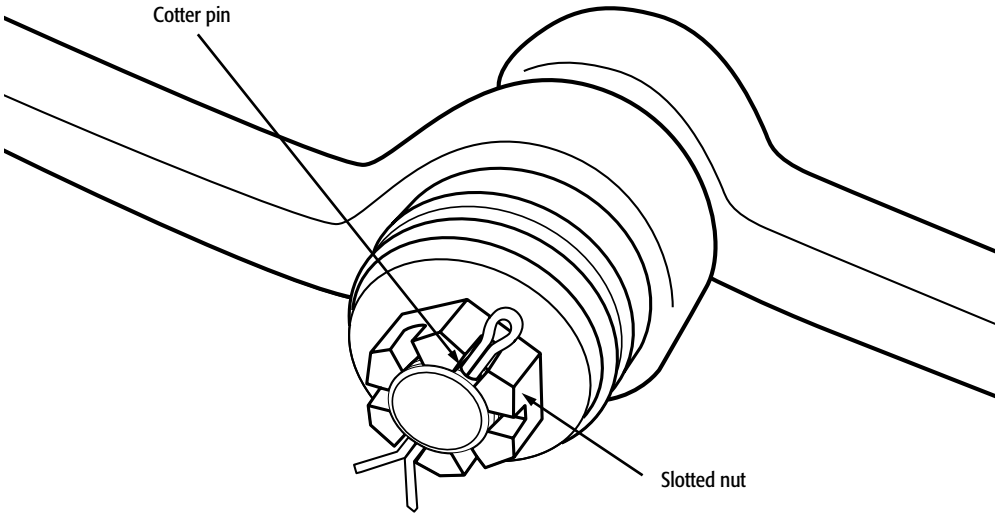

Two-axle steering system (12-wheel heavy vehicle)

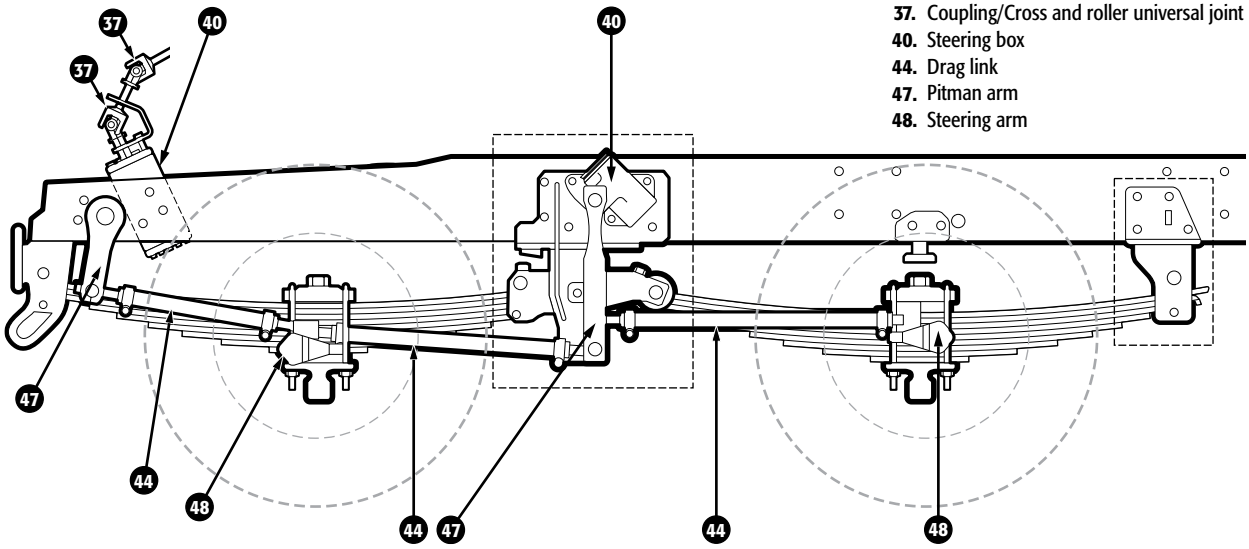

37. Coupling/Cross and roller universal joint
40. Steering box
44. Drag link
47. Pitman arm
48. Steering arm

Conventional steering linkage (light vehicle)

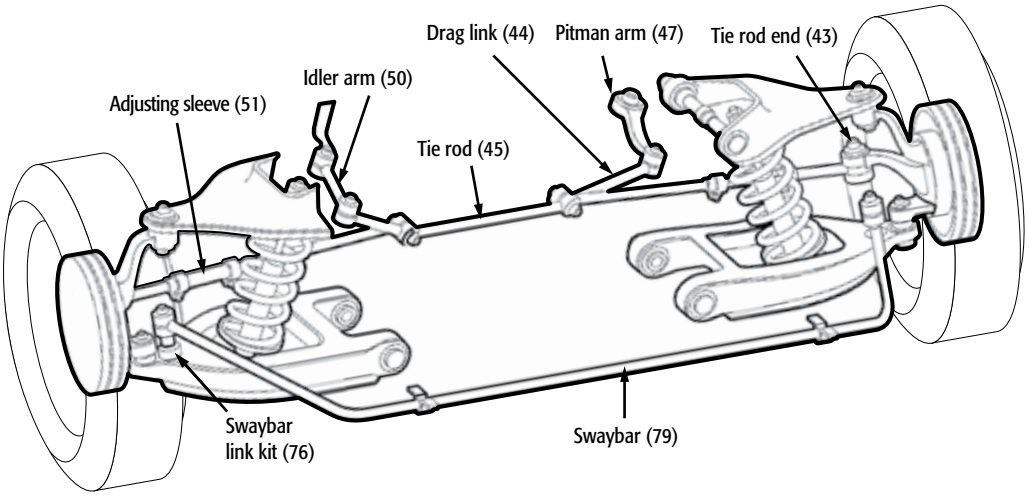

Rack-and-pinion steering system (light vehicle)

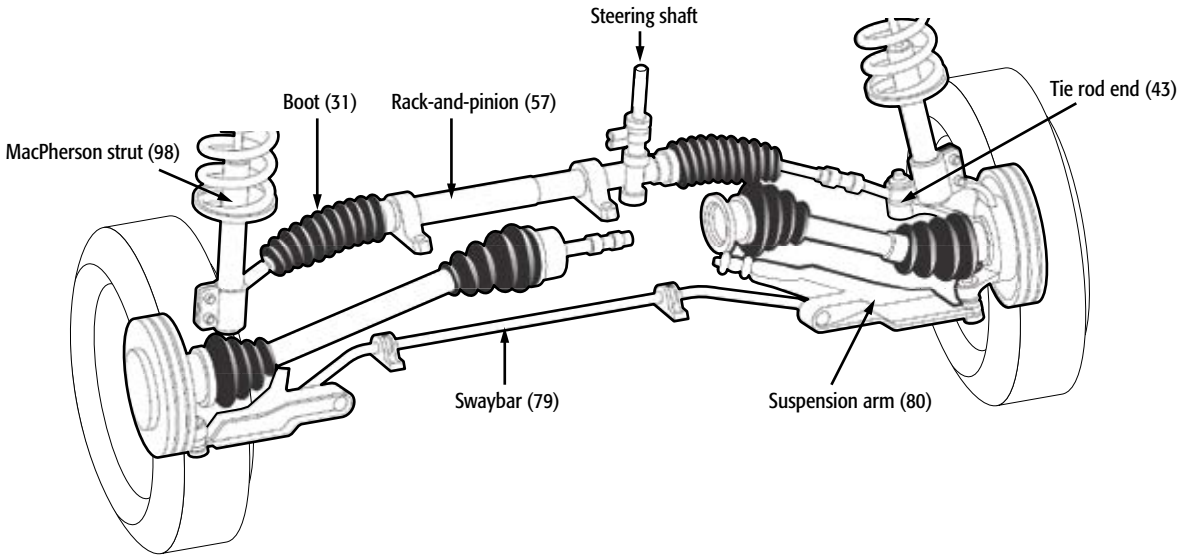

Rack-and-pinion steering system (heavy vehicle)

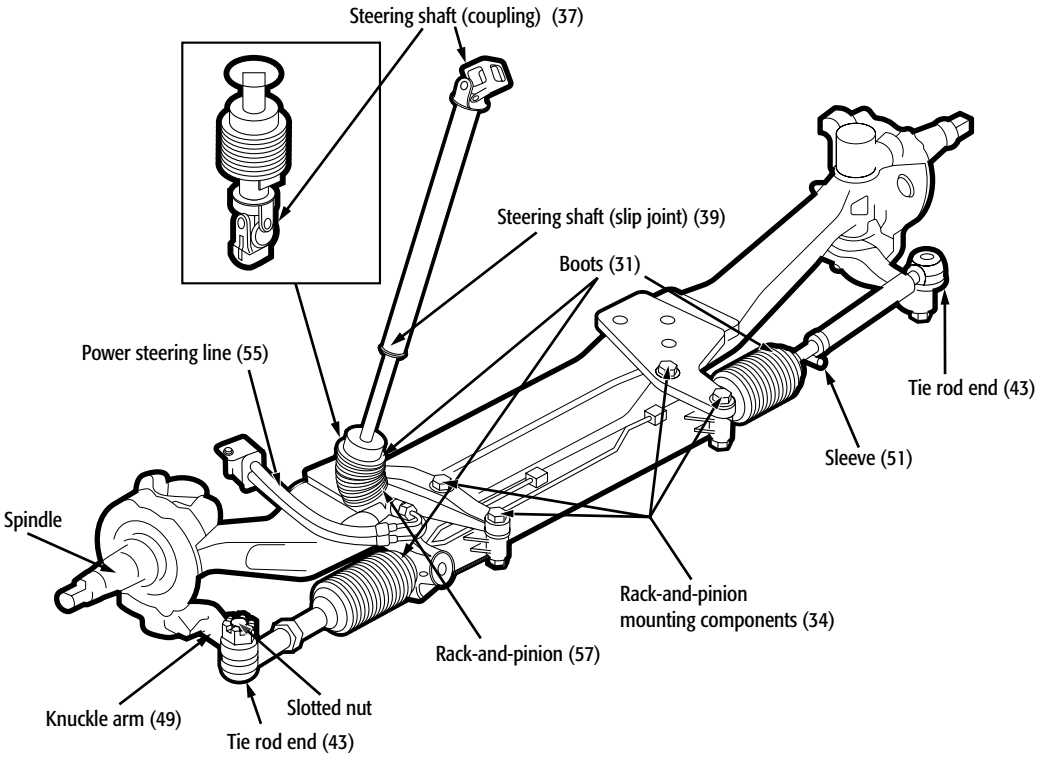

Parts and Procedures	Description of the Defect

2.5 Power steering (ss. 103, 105, 108 and 167)

Inspect the following components with the engine turned off:

a) Fluid level

The fluid in the reservoir (41) is not at the level recommended by the manufacturer (JJ) (s. 108).

b) Pump belt

Note:
An insufficiently tightened belt slips when the steering wheel is turned.

The pump belt (53) is cut (G) or not at the tension recommended by the manufacturer (BB) (s. 108).

The pump belt (53) has a cut or cracks that are likely to cause an imminent break (AE) (s. 167, par. (4)).

Parts and Procedures	Description of the Defect
c) Lines and fittings	A line (55) or fitting (55) is cracked (Q) or not securely mounted (CC) (ss. 103 and 108). A line (55) is in contact (AC) with a mobile part (s. 108). A line (55) has a leak (T) other than slight oozing (s. 108). A line (55) has a cut or cracks that are likely to cause an imminent break (AE**) (s. 167, par. (4)). ** Specify in the comments.
d) Pump	The pump (42) is not securely fixed (CC) or has a leak (T) other than slight oozing (s. 108). The pump (42) is not securely fixed and there is a risk of breakage (AE) (s. 167, par. (4)).
e) Auxiliary cylinder	The auxiliary cylinder (54) is not securely fixed (CC) or has a missing or loose bolt (CC) (s. 105, par. (1) and par. (2)). The auxiliary cylinder (54) has a leak (T) other than slight oozing (s. 108). The auxiliary cylinder (54) is not securely fixed and there is a risk of breakage (AE) (s. 167, par. (4)).
f) Working order **Inspection method:** 1. Start the engine. 2. Turn the steering all the way to the left and right. ***Note:*** Straight-body trucks should not be loaded during this inspection; otherwise the inspection should be performed while slowly moving the vehicle forward a few metres.	The power steering (41) does not work properly (R**) (s. 103). ** Specify in the comments. The power steering (41) does not work (GG) (s. 167, par. (3)).

2.6 Steering knuckles (ss. 103 and 113)

a) Horizontal play

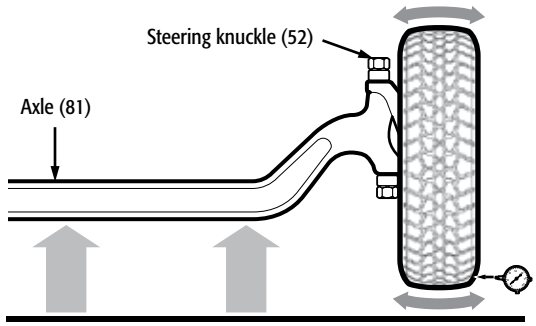

Inspection method:

1. Lift the wheels off the ground;
2. Install a dial gauge on the outside circumference of the tire;
3. As needed, apply the service brakes to eliminate bearing play;
4. Place your hands on the top and bottom of the wheel and tilt it back and forth from the inside to the outside. You can also use a pry bar inserted into the wheel rim or under the tire;
5. Measure the amount of play in the steering knuckle.

The horizontal play in a steering knuckle (52) measured at the outer circumference of the tire exceeds the maximum value indicated in the manufacturer's standards or, in their absence, the following standards:

- 3.2 mm (1/8 in) (Z**) for a rim whose diameter is less than 510 mm (20 in) (s. 113, par. (1)).
- 4.8 mm (3/16 in) (Z**) for a rim whose diameter is 510 mm (20 in) or more (s. 113, par. (2)).

** Indicate the measurement in the comments.

The steering knuckle (52) is seized up (U) (s. 103).

b) Vertical play

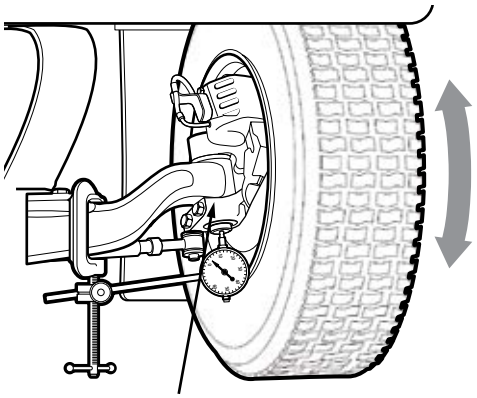

Inspection method:

1. Lift the wheels off the ground;
2. Place a pry bar under the wheel and apply vertical force;
3. Measure the amount of vertical play between the axle and the spindle support. Use a dial gauge as needed.

The vertical play between a spindle support (52) and the axle exceeds the maximum value indicated in the manufacturer's standards or, in their absence, 2.5 mm (3/32 in) (Z**) (s. 113).

** Indicate the measurement in the comments.

2.7 Ball joints (ss. 112 and 167)

Inspection method:

1. Depending on the type of suspension system, lift the front of the vehicle so as to remove the load on the joint to be checked.
2. Install a dial gauge on the suspension arm so as to measure the vertical and horizontal play between the ball joint and its housing.

• Horizontal play

Place your hands on the top and bottom of the tire and try to tilt it back and forth.

Note:

Do not measure the horizontal play where not indicated by the manufacturer.

• Vertical play

Place a pry bar under the tire and lift it enough to offset the weight of the wheel and tire.

The vertical or horizontal play (46) measurement exceeds the play determined by the manufacturer (W**) (s. 112).

** Indicate the measurement in the comments.

A ball joint (46) linked to a suspension arm has 50% more play than the manufacturer's standard (W**) or could come out of its housing after a shock (AE) (s. 167, par. (8)).

** Indicate the percentage in the comments.

Where a ball joint (46) has a wear indicator, the position of the indicator is not within the limits determined by the manufacturer (W**) (s. 112).

** Specify in the comments.

Spring suspension on upper arm

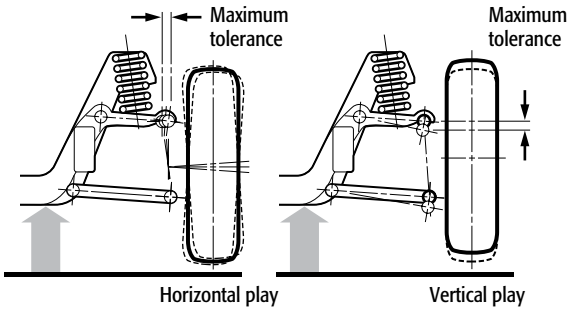

Spring or torsion bar suspension on lower arm

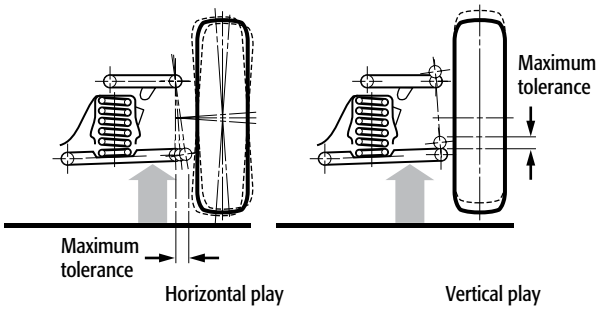

Note:

Where the ball joints have a wear indicator, perform the inspection with the wheels on the ground.

MacPherson strut suspension (98)

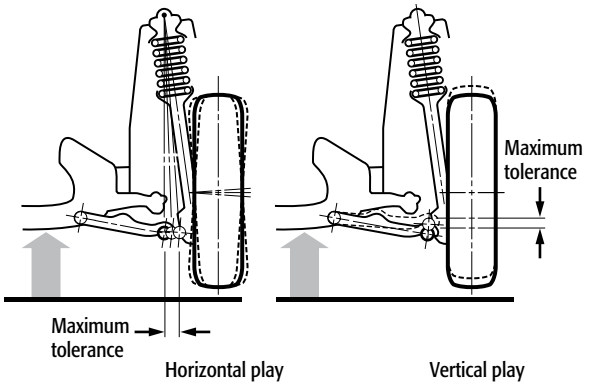

Ball Joint (46)

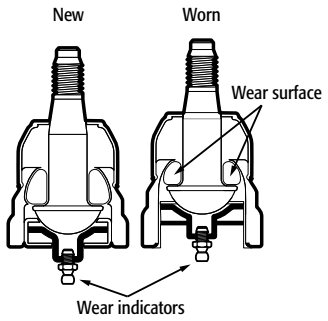

2.8 Component and defect codes for the steering system

COMPONENT	DEFECT
31 – Boot	A – Absent/Missing/Not equipped
32 – Steering shock absorber	F – Broken
33 – Steering	G – Cut/Torn/Abraded/Scraped
34 – Fastener (steering)	K – Bent/Elongated
35 – Steering wheel	N – Damaged
36 – Adjustable steering wheel	Q – Cracked/Grooved
37 – Coupling (steering shaft)	R – Does not work properly
38 – Steering column (anchorage)	T – Leak
39 – Slip joint	U – Seized up/Stuck
40 – Steering box	W – Does not comply with manufacturer's standards
41 – Power steering	X – Does not comply with regulatory standards
42 – Pump (power steering)	Z – Abnormal play
43 – Tie rod end	AA – Excessive play
44 – Drag link	AC – Touches/Allows to come in contact with
45 – Tie rod/Centre link	AE – Risk of rupture/Separation
46 – Ball joint	BB – Improperly adjusted
47 – Pitman arm	CC – Not securely mounted
48 – Steering arm	EA – Displaced
49 – Knuckle arm	EE – Improperly tightened/Loose
50 – Idler arm	FF – Modified/Poorly repaired
51 – Adjusting sleeve	GG – Does not work
52 – Steering knuckles/Spindle support	IN – Inadequate
53 – Pump belt (steering)	JJ – Oil level too low
54 – Auxiliary cylinder	KK – Inappropriate
55 – Line/Fitting	MA – Misaligned
56 – Steering stop	RR – Welded
57 – Rack and pinion	WA – Damaged/Deteriorated
	WW – Worn

Section 3

Chassis Frame, Underbody, Load Space and Coupling Device

Chassis Frame, Underbody, Load Space and Coupling Device

Parts and Procedures	Description of the Defect

3.1 Chassis frame and underbody (ss. 98, 99, 100 and 169)

General Provisions

A component of the chassis frame (*) is broken, cracked or sags in a way that makes a mobile part and the body touch (AC**) (s. 169, par. (1)).

* Indicate the component number.
** Specify "broken", "cracked" or "sags" in the comments.

A component of the chassis frame (*) is so cracked (Q**) or broken (F**) that it hampers the good working order or reduces the solidity of a steering, suspension, coupling, engine or transmission component (s. 169, par. (2)).

* Indicate the component number.
** Specify "hampers the good working order or reduces the solidity" and which component is referred to in the comments.

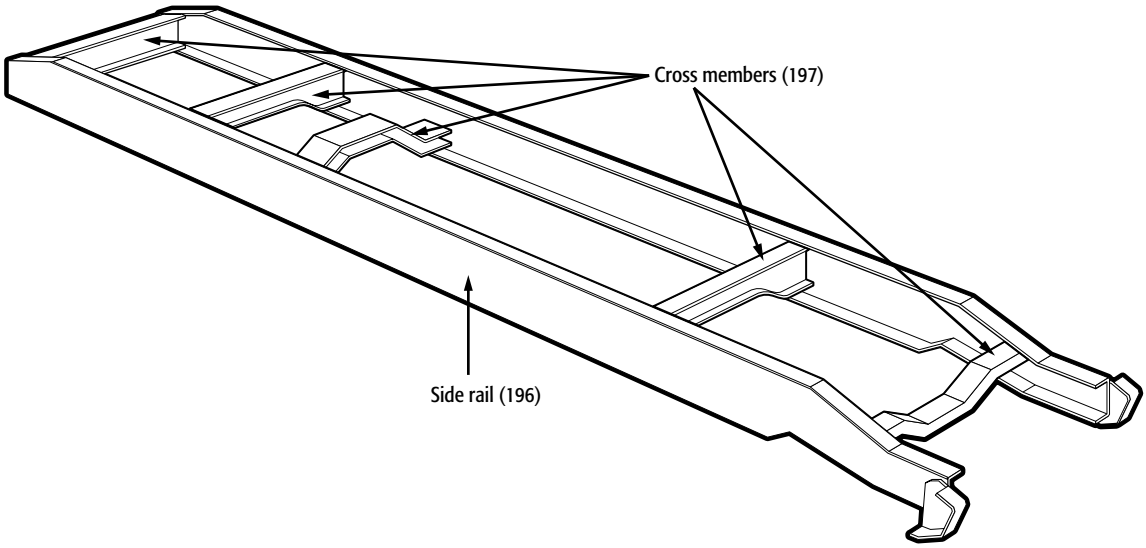

Parts and Procedures	Description of the Defect

Inspect the following components

a) Side rails

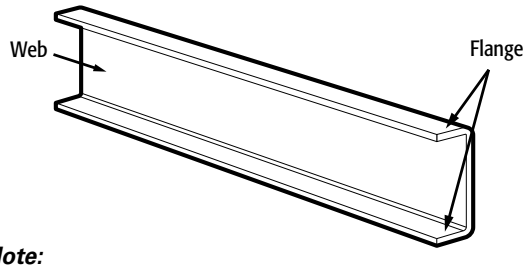

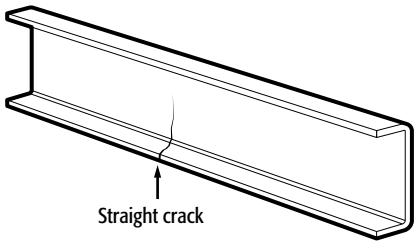

Note:

These requirements apply to all types of side rails (single and double channel).

Single channel side rail

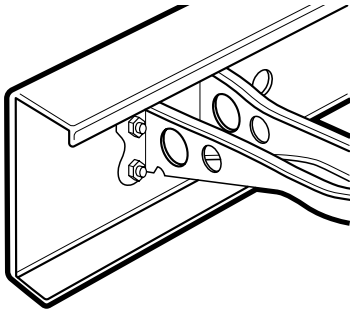

Double channel side rail

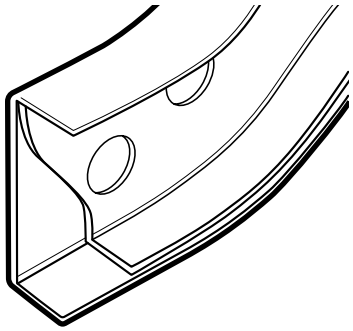

A side rail on a closed semi-trailer or open-top semi-trailer is in imminent danger of breaking where:

an upper side rail is:

- broken with a complete separation.
- bent or cracked near roof bows that are broken or missing.

a lower side rail is:

- broken in the self-supporting zone and the floor sags where the break is located.

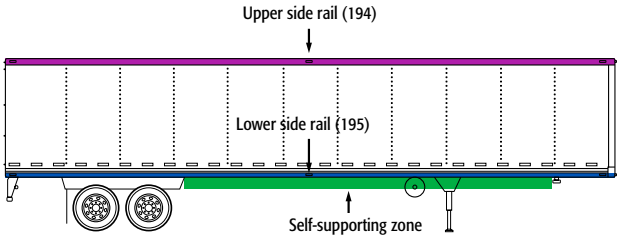

Notes:

- The lower side rail of a closed semi-trailer or an open-top semi-trailer may show grooves, notches or bending that occurred while the vehicle was being operated. This type of superficial damage has little effect on the side rail's solidity or structural integrity.
- For all types of double channel side rails, a bulge caused by corrosion that results in distortion of 10 mm or more is a minor defect.

A side rail (194, 195. 196) is broken (F) in a place where there is no stress, cracked, (Q) bent, (K**) perforated by rust (NN) or shows a sign of repair (FF**) or a modification (FF**) that weakens the structure of the road vehicle (s. 98). See the notes in the left-hand column.

K** Specify the measurement in the comments.
FF** Specify "weakens the structure" in the comments.

A side rail (194, 195, 196) is in imminent danger of breaking (AE) (s. 169, par. (1)).

There is a crack (Q**) measuring 38 mm (1 ½ in) or more in the vertical part of the side rail (196) (web) or a crack (Q**) measuring 25 mm (1 in) or more in the horizontal lower part of the side rail (196) (flange) (s. 169, par. (3)).

** Specify the measurement and location in the comments.

There is a crack (Q**) beginning in the horizontal lower part of a side rail (196) (flange) and extending into the vertical part of a side rail (web) (s. 169, par. (3)).

** Indicate the location in the comments.

Parts and Procedures	Description of the Defect

b) Cross members

Note:

A cross member holds two side rails parallel to each other and can support equipment (engine, transmission, etc.), whereas a floor joist rests on the side rails.

A cross member (197) is missing, (A) not securely mounted, (CC) cracked, (Q) broken, (F) improperly assembled, (MI) bent, (K) perforated by rust, (NN) or shows a sign of repair (FF**) or a modification (FF**) that weakens the structure of the road vehicle (s. 98).

** Specify "weakens the structure" in the comments.

c) Parts of the frame used to fix the body, the load, the load space, the coupling device, a piece of equipment, an accessory, the steering, the suspension, the engine, the gearbox and the differential

Inspect the parts of the frame used to attach the engine (supports) using the following method:

1. Apply the parking brake;
2. Press on the service brake;
3. Put the gearshift lever in drive or a forward gear;
4. Gently rev the engine;
5. Put the gearshift lever in reverse;
6. Gently rev the engine.

An engine lifting to the left or right indicates a defective engine support.

A component (*) is missing, (A) inoperative, (V) not securely mounted, (CC) damaged, (N) cracked, (Q) broken (F) or bent (K) (s. 99).

* Indicate the component number in the comments.

d) Floor joists

Note:

A floor joist rests on the side rails, whereas a cross member holds two side rails parallel to each other and can support equipment (engine, transmission, etc.).

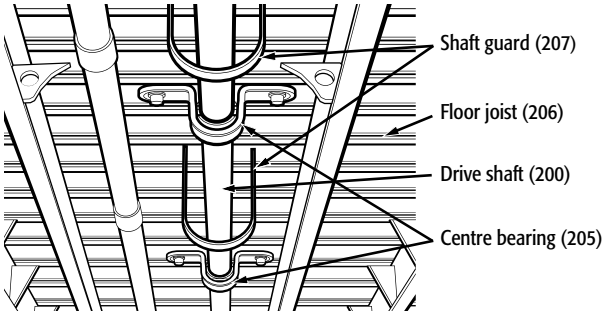

A joist (206) is missing, (A) not securely mounted, (CC) damaged, (N) cracked, (Q) broken (F) or bent (K) (s. 99).

e) Underbody

Check the structural members of the body, the side rails and the profiled-sheet cross members.

Note:

Monocoque bodies (i.e. the body and chassis are a single inseparable unit) have profiled-sheet structural members rather than conventional side rails.

A structural member (193) is missing, (A) not securely mounted, (CC) cracked, (Q) broken, (F) bent, (K) perforated (NN) by rust, improperly assembled (MI) or shows a sign of repair (FF**) or a modification (FF**) that weakens the structure of the road vehicle (s. 98).

** Specify "weakens the structure" in the comments.

Parts and Procedures	Description of the Defect

Monocoque body

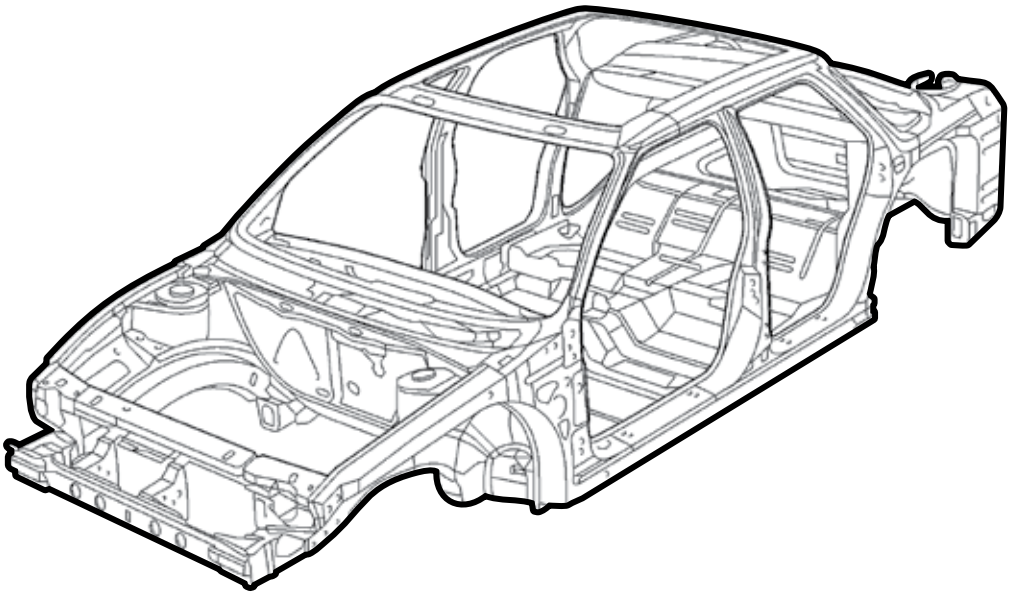

f) Drive shaft

Visually and manually inspect the following components:

- the universal joints;
- the centre bearing and its supports (two-piece drive shaft);
- the shaft guard where it is part of the original equipment (mandatory in school buses with a front-mounted engine).

Notes:

- A centre bearing is inadequate if it is worn or damaged to the point where it is visibly loose.
- The drive shaft is not securely mounted, bent or so cracked that it could sever from the vehicle where:
  - the mounting of an end cap is loose;
  - a universal joint bearing cap bolt is missing, broken or improperly tightened;
  - a drive shaft has a horizontal or vertical play of more than 12.8 mm (1/2 in) at the centre bearing or slip joint;
  - the centre bearing support is broken or not securely mounted;
  - a drive shaft is cracked over more than 6.4 mm (1/4 in) in one of its welds;
  - a drive shaft is visibly warped.

The drive shaft (200) is inadequate, (IN) warped, (P) not securely mounted, (CC) bent (P) or cracked (Q) (s. 100).

A universal joint (208) is not securely mounted (CC) or loose (Z) (s. 100).

The slip joint, (202) the centre bearing (205) or its support (205) is inadequate (IN) (s. 100).

The shaft guard (207) is missing (A) or not securely mounted (CC) (s. 100).

The drive shaft (200) is not securely mounted, bent or so cracked that it could sever from the vehicle (AE**) (s. 169, par. (7.1)).

** Explain in the comments.

3.2 Load space (s. 101)

Inspect the following components:

- Panels, side rails, posts, poles, roof bows and platform.

Where the platform, cargo body, dump body or equipment is not an integral part of the chassis frame:

- Fasteners, stoppers

An element delimiting the load space, such as a panel, (221) a side rail, (222) a post, (220) a pole, (220) a roof bow (219) or a platform, (223) is not securely mounted (CC) or is not strong enough to support the maximum loads determined by regulation (B) (s. 101, par. (1)).

A fastener, such as a bracket, (225) a clamp, (224) a bolt (224) or a stopper (226) is worn (WW**) or corroded (NA**) to the point that its capacity is reduced, is missing, (A) not securely mounted, (CC) cracked, (Q) broken (D) or loose (EE) (s. 101, par. (2)).

** Specify "capacity is reduced" in the comments.

3.3 Lifting or support device of a trailer or semi-trailer whose GVWR is 4,500 kg or more (s. 101)

Check the working order of the lifting or support device.

A component of the lifting or support device (175) of a trailer or semi-trailer whose GVWR is 4,500 kg or more is inadequate, (IN**) shows evidence of excessive wear (WW) or is not securely mounted (CC) (ss. 41 and 101, par. (3)).

** Specify in the comments.

The mechanism or positioning components (175) do not allow for adequate seating of parts (IN**) (s. 101, par. (3)).

** Specify "do not allow for adequate seating" in the comments.

3.4 Sliding bogie (ss. 98, 101 and 169)

Examine the following components:

a) Frame of the sliding bogie

A component of the frame (*) is cracked, (Q) bent, (K) perforated by rust (NN) or shows a sign of repair (FF**) or a modification (FF**) that weakens the structure of the road vehicle (s. 98).

* Indicate the component number.
** Specify "weakens the structure" in the comments.

A side rail (194, 195, 196) is in imminent danger of breaking (AE) (s. 169, par. (1)).

A component of the frame (*) is broken, cracked or sags in a way that makes a mobile part and the body touch (AC**) (s. 169, par. (1)).

* Indicate the component number.
** Specify "broken", "cracked" or "sags" in the comments.

Parts and Procedures	Description of the Defect
	There is a crack (Q**) measuring 38 mm (1 ½ in) or more in the vertical part of the side rail (196) (web) or a crack (Q**) measuring 25 mm (1 in) or more in the horizontal lower part of the side rail (196) (flange) (s. 169, par. (3)). ** Indicate the measurement in the comments.
	There is a crack (Q**) beginning in the horizontal lower part of the side rail (196) (flange) and extending into the vertical part of the side rail (196) (web) (s. 169, par. (3)). ** Indicate the location in the comments.

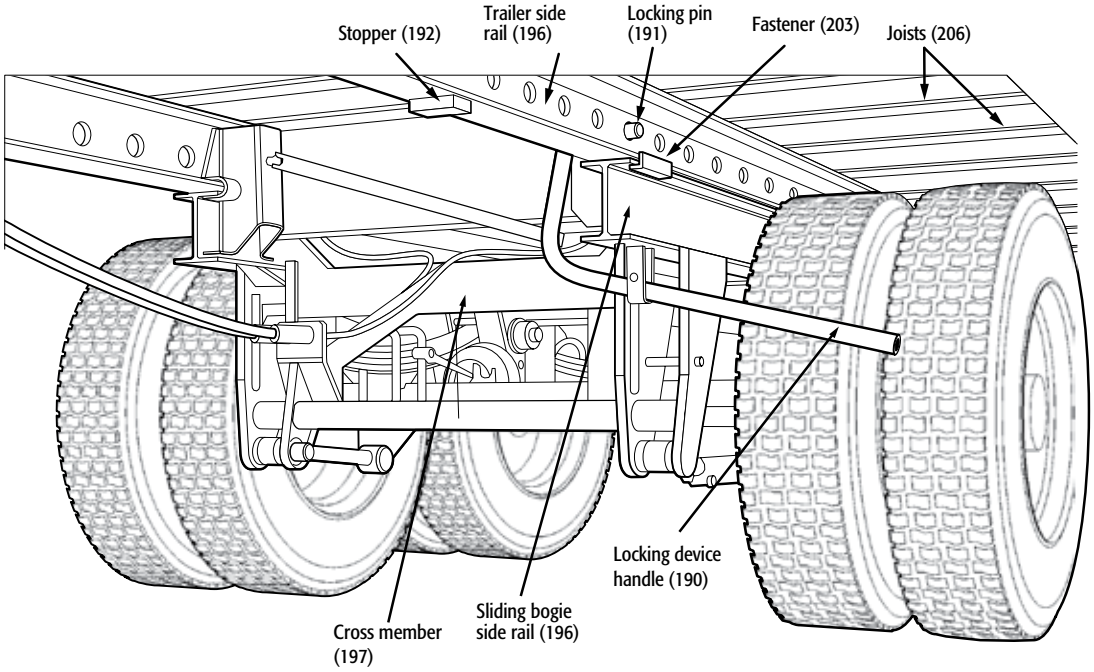

b) Locking and hold-down system Activate the device.	The locking system (190) or a fastener (203) is missing, (A) inoperative, (V) not securely mounted, (CC) damaged, (N) cracked, (Q) broken, (F) seized up (U) or stuck (U) (s. 101, par. (4)). More than 25% of the locking pins (191) in the sliding bogie are missing (A**) or not engaged (V**) (s. 169, par. (4)). ** Specify the percentage in the comments.
c) Safety device (stopper)	A stopper (192) is missing, (A) cracked (Q) or broken (F) (s. 101, par. (4)).

3.5 Coupling plate (ss. 101 and 169)

Inspect the mounting of the coupling plate and measure the curve of the coupling plate using a straight rod at least 1 m long and a slide caliper.

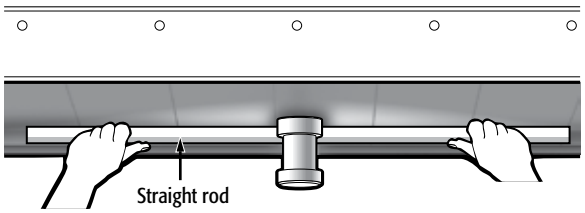

Check the downward curve.

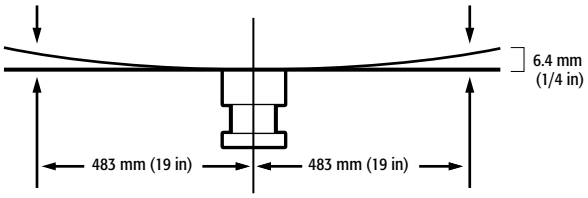

Check the upward curve.

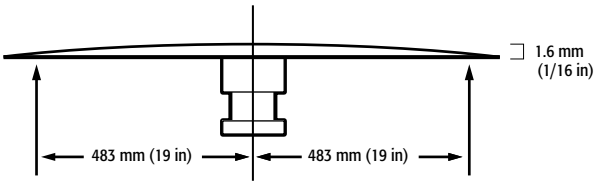

Note:

Applying a Teflon plate on the coupling plate of a semi-trailer is acceptable provided the residual length of the kingpin does not hamper the proper working order of the fifth wheel jaws.

The coupling plate (172) is curved downward (X**) more than 6.4 mm (1/4 in) or more than 1.6 mm (1/16 in) upward (X**) within a radius of 483 mm (19 in) measured from the kingpin (s. 101, par. (5)).

** Specify the measurement in the comments.

The coupling plate (172) is corroded (NA**) or worn out (WW**) to the point of weakening its resistance or the solidity of its mounting to the vehicle (s. 101, par. (5)).

** Specify "weakening its resistance or the solidity of its mounting" in the comments.

The coupling plate (172) is so bent (K**) that it makes coupling difficult, is cracked (Q) or not securely fixed (CC) (s. 169, par. (5)).

** Specify "makes coupling difficult" in the comments.

3.6 Kingpin (ss. 101 and 169)

Inspect the mounting and condition of the kingpin, measure its wear with an appropriate tool and check the angle using a square that is longer than 38 cm (15 in) on one side.

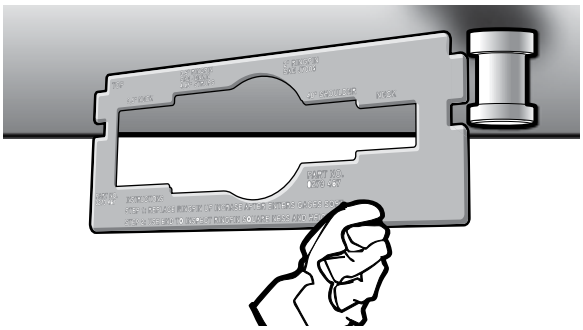

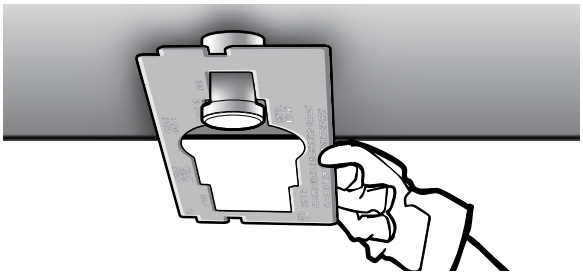

The kingpin (173) and coupling plate are not at a right angle respectively in all directions (X**) (s. 101, par. (5)).

** Specify in the comments.

The kingpin (173) shows indications of repair by welding (RR) (s. 101, par. (5)).

The kingpin (173) is worn (WW**) such that the diameter in a given spot is reduced by more than 3.2 mm (1/8 in) (s. 101, par. (5)).

** Specify the measurement in the comments.

The kingpin (173) is bent (K**) to an extent that makes coupling difficult, cracked, (Q) or not securely fixed (CC) (s. 169, par. (5)).

** Specify "makes coupling difficult" in the comments.

3.7 Turntable platform (ss. 101 and 169)

If the coupling plate and kingpin are mounted on a turntable platform, inspect the mounting, its working order and vertical play using a micrometer.

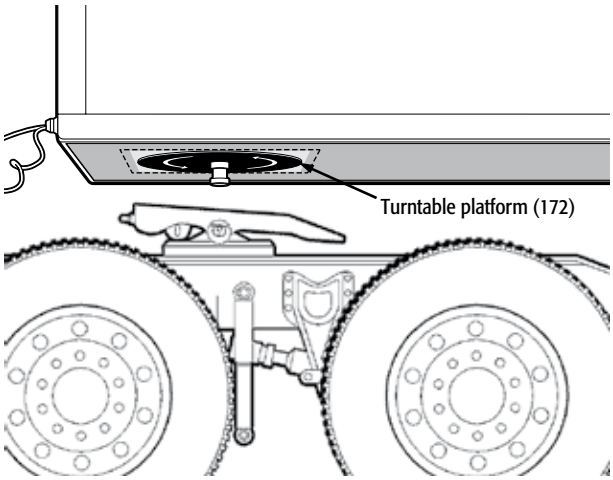

The turntable platform (172*) is not securely mounted, (CC) does not turn freely on its bearings (U) or shows a vertical play of more than (Z**) 6.4 mm (1/4 in) (s. 101, par. (5)).

* Specify "turntable" in the comments.
** Specify the measurement in the comments.

3.8 Fifth wheel (ss. 101, 169 and 169, par. (7))

Fixed fifth wheel

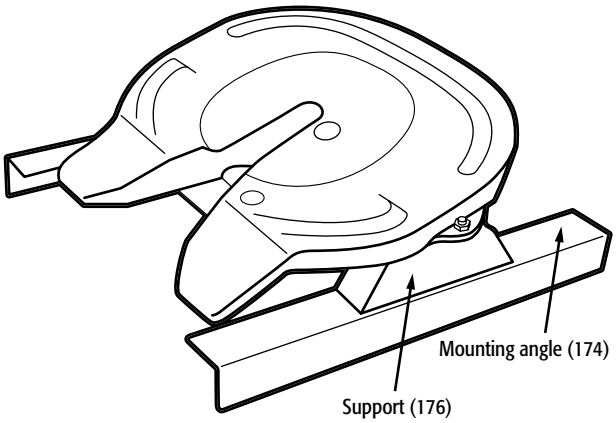

Inspect the following components:

Notes:

- Raising a fifth wheel with pieces of wood is prohibited.
- If steel shims are used to raise a fifth wheel and the shims are not provided by the fifth wheel manufacturer, the raised fifth wheel must include a engineer's report on the raising of the fifth wheel, all of which must be submitted to the Direction générale de l'expertise légale et de la sécurité des véhicules for approval.

General Provisions

A component of the fifth wheel (171*,174*) is missing, (A) cracked, (Q) broken, (F) bent, (K) not securely fixed (CC) or out of order (V) (101, par. (6)).

* Specify which component in the comments.

While the road vehicle is coupled to a semi-trailer:

A component of the fifth wheel (174*) is not securely mounted, (CC**) cracked, (Q**) broken, (F**) worn, (WW**) bent, (K**) missing, (A**), damaged, (N**) so maladjusted (BB**) that it might rupture or fall off (s. 169, subpar. (d) of par. (7)).

The kingpin (173) is improperly engaged (WB) (s. 169, par. (6)).

There is movement (Z) between a fastener (174*) of the coupling device and the chassis of the road vehicle (s. 169, par. (6)).

A component (171*, 174, 176) of the fifth wheel that bears a load or that is subjected to tension or sheer stress is cracked, (Q) broken (F) or repaired by welding (RR) (s. 169, subpar. (d) of par. (7)).

* Specify which component in the comments.
** Specify "that it might rupture" in the comments.

Parts and Procedures	Description of the Defect

a) Supports

Notes:

- In the metric system, the equivalent of a Grade 8 bolt is 10.9.

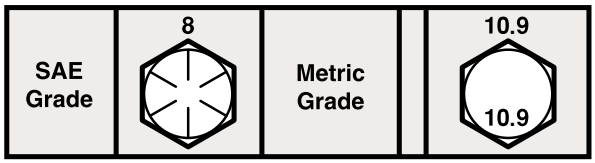

- On some fifth wheel models, a central bolt crosses through two coupling device fasteners. This bolt must be considered in the calculation of the 20% for each component of the coupling device.

  Here are three examples of bolt groupings with regard to the application of the major defect concerning the calculation of 20% of the fasteners per coupling device component:

A support (176) of the coupling plate is cracked,(Q) broken, (F) not securely fixed (CC) or has welded repairs not intended by the manufacturer (RR) (s. 101, par. (8)).

One or more fasteners (171) of the fifth wheel are missing, (A) broken (F) or slack (EE) (s. 101, par. (6)).

A bolt (171) of a grade lower than 8 (X**) is used to attach the fifth wheel to the vehicle that is used to tow a semi-trailer with a GVWR of 4,500 kg (9,921 lb) or more (s. 101, par. (6)).

** Specify in the comments.

While the road vehicle is coupled to a semi-trailer:

More than 20% of the fasteners (171) are missing, (A**) broken, (F**) or slack (EE**) on a component of the coupling device (s. 169, subpar. (e) of par. (7)).

** Specify the percentage in the comments.

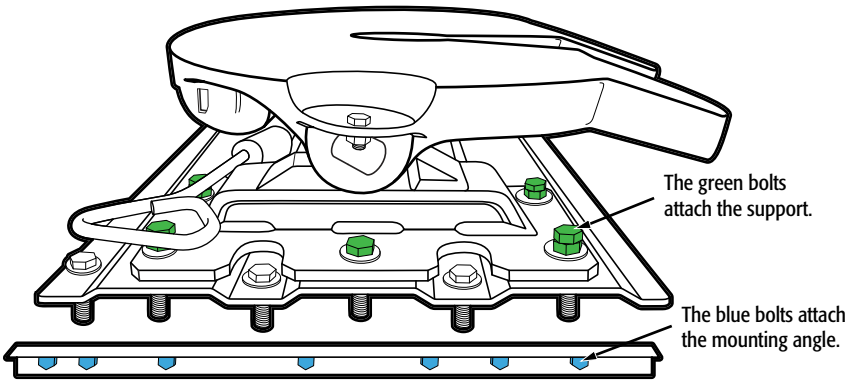

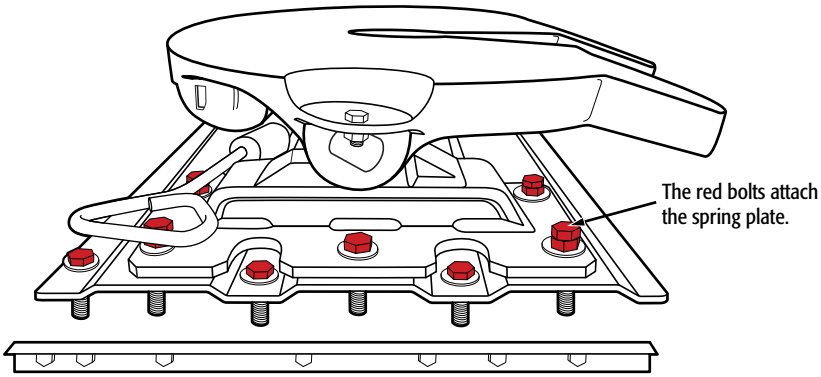

b) Jaws and mechanism

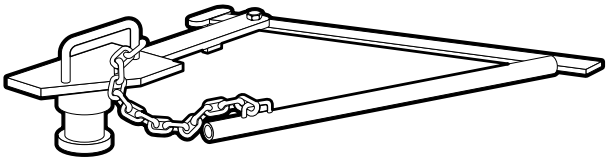

Tool used to measure the play between the jaws and the kingpin

Notes:

- For a tractor truck that is unhitched, the locking mechanism and the play between the jaws and the kingpin are checked using a tool attached to the kingpin.
- For combinations of road vehicles, the play between the jaws and the kingpin is measured as follows:
  1. Apply the parking brakes of the semi-trailer;
  2. Back up the tractor truck;
  3. Put a reference mark on both parts of the coupling device;
  4. Drive the tractor truck forward, apply the road vehicle's parking brakes and turn off the engine;
  5. Measure the space between the two marks.

A component of the mechanism for tightening the jaws (174*) or a component of the locking mechanism (181*) is worn (WW**) or maladjusted (BB**) in a way that adversely affects the good working order, is missing, (A) seized up, (U) cracked, (Q) broken, (F) not securely mounted (CC) or shows signs of repair by welding (RR) (s. 101, par (6)).

* Specify which component and specify "for the fifth wheel" in the comments.

** Specify "adversely affects the good working order" in the comments.

The horizontal play (Z**) between the jaws (174) and the kingpin exceed 6.4 mm (¼ in) (s. 101, par. (7)).

** Specify the measurement in the comments.

While the road vehicle is coupled to a semi-trailer:

A component of the mechanism for tightening the jaws (174*) or a component of the locking mechanism (181*) is cracked, (Q) broken, (F) or shows signs of repair by welding (RR) (s. 169, subpar. (b) of par. (7)).

* Specify "which component of the mechanism" in the comments.

A component of the mechanism for tightening the jaws (174*) or a component of the locking mechanism (181*) is not securely mounted, (CC) worn, (WW) bent, (K) missing, (A) damaged (N) or maladjusted (BB**) (s. 169, subpar. (d) of par. (7)).

** Specify "to the point that it might rupture or fall off" in the comments.

The horizontal play (AA**) between the kingpin and the jaws (174) exceeds 12.8 mm (1/2 in) (s. 169, par. (6)).

** Specify the measurement in the comments.

Parts and Procedures	Description of the Defect

c) Coupling plate

Notes:

- A repair by welding is only acceptable if it is done on a section of the plate that guides the kingpin.
- Applying a Teflon plate on the coupling plate of the fifth wheel is acceptable provided the residual length of the kingpin does not hamper the proper working order of the fifth wheel jaws.

  The pivoting fifth wheel can be blocked or unblocked based on the type of trailer used.
- Coupling a semi-trailer with a pivoting coupling plate to a tractor truck with a pivoting fifth wheel is prohibited.
- Coupling a semi-trailer with a fixed coupling plate to a tractor truck with a fixed fifth wheel (non-pivoting) is prohibited.

Device for preventing the fifth wheel from pivoting based on the type of semi-trailer used.

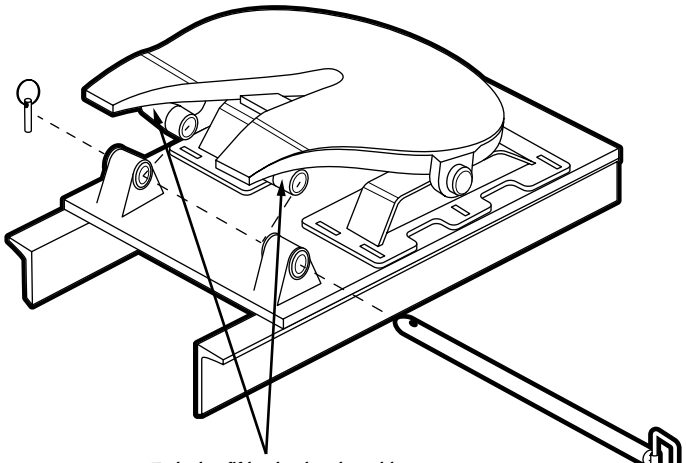

To lock a fifth wheel, only welds on non-load bearing areas are accepted.

The coupling plate (174) is cracked, (Q) broken, (F) bent, (K) or shows signs of repair by welding (RR) (s. 101, par. (7)).

While the road vehicle is coupled to a semi-trailer:

There is a crack, (Q) a break, (F) or a weld (RR) in the part of a component of the coupling device (174) that bears a load or that is subjected to tension or sheer stress (s. 169, subpar. (b) of par. (7)).

d) Coupling plate axes

The coupling plate axes (176) show a horizontal play (Z**) that exceeds 9.5 mm (3/8 in) or a vertical play (Z**) that exceeds 12.8 mm (1/2 in) (s. 101, par. (8)).

** Specify the measurement in the comments.

e) Slide supports and stoppers for the sliding fifth wheel

Notes:

- The locking pins can be welded.
- A sliding fifth wheel can be modified to become fixed, provided the locks installed by the manufacturer are still present and effective. The welds must not affect the integrity of the fifth wheel components.

Sliding fifth wheel

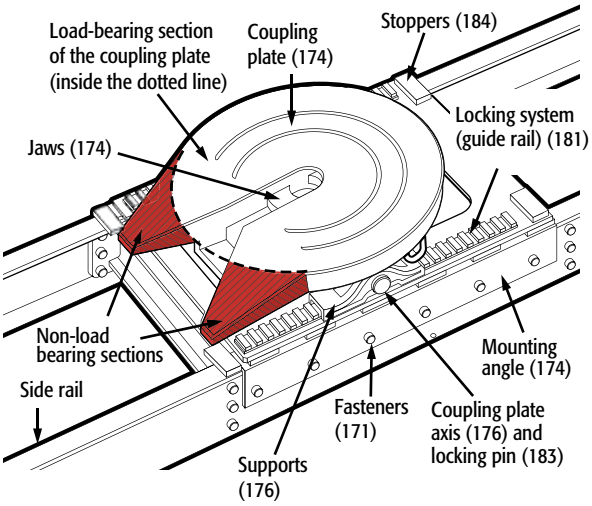

A front or rear stopper (184) is missing (A) or not securely mounted (CC) (s. 101, par. (9).).

A slide support (176*) is cracked, (Q) broken, (F) damaged (N) or not securely mounted (CC) (s. 101, par. (6)).

* Specify the "slide support" in the comments.

The mechanism for locking the slide supports (181) is inadequate (IN**) or allows a side, vertical or lengthwise movement (Z**) of more than 6.4 mm (¼ in) in the locked position (s. 101, par. (9)).

** Specify the measurement in the comments.

While the road vehicle is coupled to a semi-trailer:

25% or more of the locking pins (183) of a sliding fifth wheel are missing (A**) or inoperative (V) (s. 169, subpar. (a) of par. (7)).

** Specify the percentage in the comments.

There is a lengthwise play (AA**) that exceeds 9.5 mm (3/8 in) in the locking mechanism of the slides (181) (s. 169, subpar. (a) of par. (7)).

** Specify the measurement in the comments.

3.9 Other coupling devices (ss. 102 and 169, par. (7))

Inspect the following components:

Notes:

- In the metric system, 10.9 is equivalent to a Grade 8 bolt.

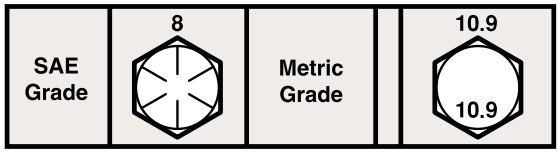

- Bolts, nuts and rivets are considered fasteners.

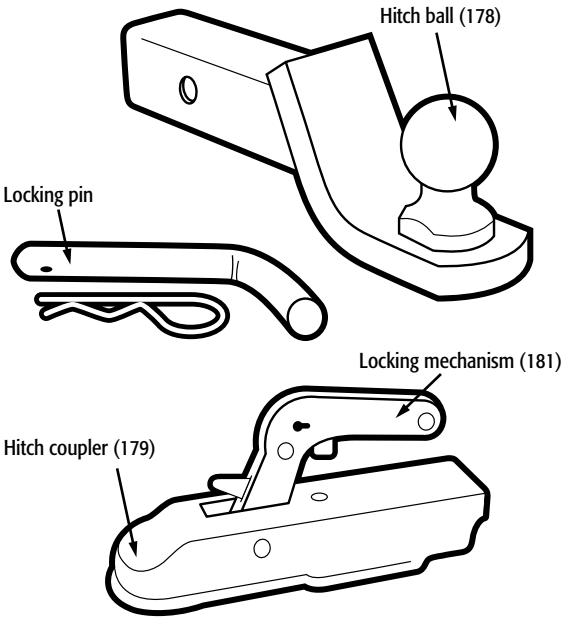

Coupling hook (180)

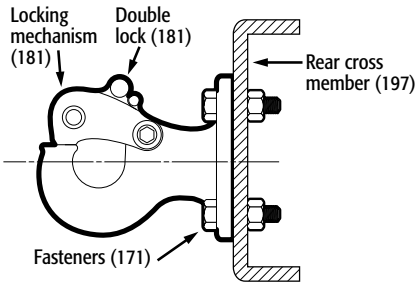

General Provisions

A component of the coupling device (*) is so worn (WW**) that it hampers the smooth operation of the device, cracked, (Q) broken, (F) bent, (K) missing (A) or seized up (U) (s. 102, par. (2)).

* Indicate which component.
** Specify "hampers the smooth operation" in the comments.

One or more fastener components of the coupling device (171) are missing, (A) broken (F) or slack (EE) (s. 102, par. (2)).

* Specify which component in the comments.

The bolts (171) used to mount the coupling device are not of at least SAE Grade 8 or the equivalent (X**) to tow a trailer with a GVWR of 4,500 kg (9,921lb) or more (s. 102, par. (1)).

** Specify in the comments.

An assembly or repair work (FF**) made on a coupling device (*) does not ensure the same conditions of safety as those intended by the manufacturer (s. 102, par. (4)).

* Specify which component.
** Specify the reason why in the comments.

There is an indication of a welded repair (RR*) on a cast or forged part (*) (s. 102, par. (4)).

* Specify which component.

While the road vehicle is coupled to a trailer:

More than 20% of the fasteners (171) are missing, (A**) broken (F**) or slack (EE**) on a component of the coupling device (s. 169, subpar. (e) of par. (7)).

** Specify the percentage in the comments.

A component of the coupling device (170*) is not securely mounted, (CC**) cracked, (Q**) broken, (F**) worn, (WW**) bent, (K**) missing, (A**) damaged (WA**) or so maladjusted (BB**) that it might rupture or fall off (s. 169, subpar. (d) of par. (7)).

* Specify which component in the comments.
** Specify "that it might rupture or fall off" in the comments.

There is a crack, (Q) a weld, (RR) or a break (F) in the part of a component of the coupling device (*) that bears a load or that is subjected to tension or sheer stress (s. 169, subpar. (b) of par. (7)).

* Specify which component in the comments.

Parts and Procedures	Description of the Defect

a) Locking mechanism

The lock (181*) is inadequate, (IN**) poorly suited, (W**) seized up, (U) or worn, (WW) has excessive play (AA) or does not engage properly (R) (s. 102, par. (2) and par. (3)).

* Specify "of the hook or hitch" in the comments.
** Specify in the comments.

In the case of a hook-and-ring locking mechanism, the locking mechanism (181*) is not equipped with double lock (X**) (s. 102, par. (3)).

* Specify "of the hook" in the comments.
** Specify in the comments.

b) Drawbar eye or pintle hook

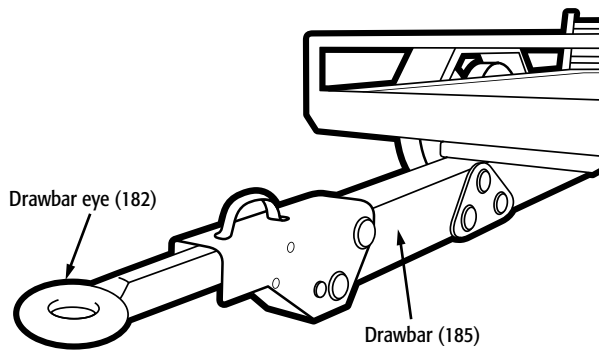

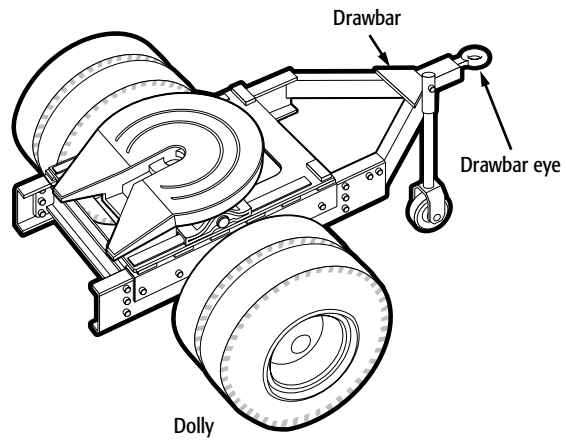

The drawbar eye (182) or the pintle hook (180) is cracked, (Q) broken, (F) bent (N) or shows signs of repair by welding (RR) (s. 102, par. (2) and par. (4)).

The drawbar eye (182) or the pintle hook (180) shows wear (WW**) at their point of contact that exceeds 4.8 mm (3/16 in) each (s. 102, par. (5)).

** Specify the measurement in the comments.

The pintle hook is equipped with a pneumatic play compensating device (186) and there is an air leak (T) in the system (s. 102, par. (6)).

While the road vehicle is coupled to a trailer:

The pintle hook (180) or drawbar eye (182) shows wear (WW**) in excess of 9.5 mm (3/8 in) at the point of contact (s. 169, subpar. (c) of par. (7)).

** Specify the measurement in the comments.

Parts and Procedures	Description of the Defect

Drawbar (185) with master cylinder (116) for hydraulic brake

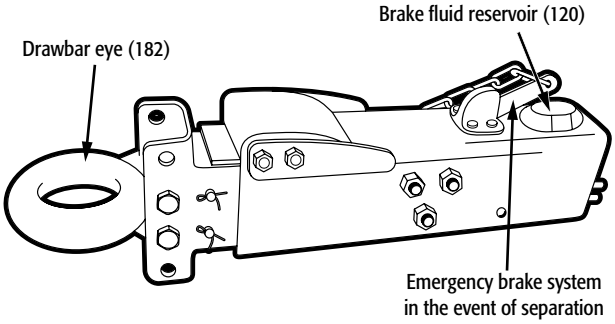

c) Drawbar

The drawbar (185) is bent, (K) broken (D) or cracked (Q) (s. 102, par. (7)).

A component (185*) of the drawbar is so worn (W**) that it no longer has the required mechanical resistance, is missing (A) or not securely mounted (CC) (s. 102, par. (7)).

* Specify the component in the comments.
** Specify "that it no longer has the required mechanical resistance" in the comments.

d) Safety fasteners and their coupling components (steel cables, chains, hooks, coupling sleeves, shackles, etc.)

A safety fastener or a coupling component (177) is missing, (A) worn, (WW) abraded, (G) cracked, (Q) broken, (F) corroded, (NA) loose, (EE) not securely fastened (CC) or inadequate (IN**) (s. 102, par. (8)).

** Specify in the comments.

3.10 Component and defect codes for the chassis frame, underbody, load space and coupling device

COMPONENTS	DEFECTS
COUPLING DEVICE	
170 – Coupling device	A – Absent/Missing/Not equipped
171 – Fastener (coupling)	C – Sharp edge/Protrusion
172 – Coupling plate	D – Broken
173 – Kingpin	F – Broken
174 – Fifth wheel/Coupling plate	G – Cut/Torn/Abraded/Scraped
175 – Lifting mechanism	K – Bent/Elongated
176 – Coupling plate support	N – Damaged
177 – Safety fastener (cable/chain/connector)	Q – Cracked/Grooved
178 – Hitch ball	R – Does not work properly
179 – Hitch coupler	T – Leak
180 – Pintle hook	U – Seized up/Stuck
181 – Locking system (coupling)	V – Ineffective/Inoperative
182 – Drawbar eye	W – Does not comply with manufacturer's standards
183 – Locking pin (coupling)	X – Does not comply with regulatory standards
184 – Stopper (coupling)	Z – Abnormal play
185 – Drawbar	AA – Excessive play
186 – Play compensating device	AE – Risk of rupture/Separation
	BB – Improperly adjusted
	CC – Not securely mounted
	EE – Improperly tightened/Loose
	FF – Modified/Poorly repaired
	IN – Inadequate
	NA – Corroded
	RR – Welded
	WA – Damaged/Deteriorated
	WB – Improperly engaged/Not locked in/ Improperly blocked
	WW – Worn

COMPONENTS	DEFECTS
CHASSIS FRAME AND UNDERBODY	
190 – Locking system (sliding bogie)	A – Absent/Missing/Not equipped
191 – Locking pin (sliding bogie)	C – Sharp edge/Protrusion
192 – Stopper (sliding bogie)	F – Broken
193 – Structural member	K – Bent/Elongated
194 – Upper side rail	N – Damaged
195 – Lower side rail	P – Warped/Buckled/Bent
196 – Side rail	Q – Cracked/Grooved
197 – Cross member	U – Seized up/Stuck
198 – Body fastener	V – Ineffective/Inoperative
199 – Engine support	Z – Abnormal play
200 – Drive shaft	AC – Touches/Allows to come in contact with
202 – Slip joint (drive shaft)	AE – Risk of rupture/Separation
203 – Fasteners (frame)	CC – Not securely mounted
204 – Transmission support	FF – Modified/Poorly repaired
205 – Centre bearing (drive shaft)	IN – Inadequate
206 – Joist	MI – Improperly installed/Improperly assembled
207 – Shaft guard	NN – Perforated/Holes (caused by rust)
208 – Universal joint (drive shaft)	WA – Damaged/Deteriorated
	WB – Improperly engaged/Not locked in/Improperly blocked
LOAD SPACE	
219 – Roof bow	A – Absent/Missing/Not equipped
220 – Post	B – Weakened
221 – Panels (also applies to the body)	C – Sharp edge/Protrusion
222 – Side rail	D – Broken
223 – Platform	Q – Cracked/Grooved
224 – Fastener (load space)	AE – Risk of rupture/Separation
225 – Support	CC – Not securely mounted
226 – Stopper (load space)	EE – Improperly tightened/Loose
	NA – Corroded
	WA – Damaged/Deteriorated
	WW – Worn

Section 4

Suspension

Suspension

Parts and Procedures	Description of the Defect

General Provisions (ss. 115 and 168, par. (1) and par. (4))

Inspect the suspension system to make sure it is in good condition and proper working order. If necessary, partially lift the vehicle by the frame so as to release the tension on the springs and check the following components.

Notes:

- A component for mounting the axle to the road vehicle is:
  - the U-bolt
- Components for positioning the axle to the road vehicle are:
  - the torque rod
  - the bushing
- Where the suspension has been modified to lower or raise a vehicle, that vehicle may be subject to section 214 of the *Highway Safety Code*. If in doubt, please contact the Direction générale de l'expertise légale et de la sécurité des véhicules.

A component of the suspension (*) is missing, (A) inadequate (IN**) or not securely mounted (CC) (s. 115, par. (1)).

* Indicate the component code.
** Specify in the comments.

A component of the suspension (*) is worn, (WW**) deteriorated (WA**) or damaged (N**) in a way that hampers the good working order of the suspension (s. 115, par. (1)).

* Indicate the component code.
** Specify "in a way that hampers the good working order" in the comments.

A component for mounting (*) the axle to the road vehicle is out of place, (EA) warped (K) or shows signs of welding other than welds done by the manufacturer (RR) (s. 115, par. (2)).

* Indicate the component code.

A component for positioning (*) the axle or the wheel to the road vehicle is cracked, (Q) broken, (F) not securely mounted, (CC) missing, (A) out of place, (EA) warped (K) or shows signs of welding other than welds done by the manufacturer (RR) (s. 115, par. (2)).

* Indicate the component code.

A repair (*) does not provide the same safety level as the level that existed when the vehicle was manufactured (W**) (s. 115, par. (4)).

* Indicate the component code.
** Specify in the comments.

An axle (81) is warped, (K) repaired by welding, (RR) improperly aligned (MA) or not perpendicular to the lengthwise axis of the vehicle (X**) (s. 115, par. (5)).

** Specify in the comments.

The suspension (74) allows a tire to touch (N**) the body or frame (s. 115, par. (6)).

** Specify in the comments.

A component for mounting (*) the axle to the road vehicle is missing, (A) not securely mounted, (CC) cracked (Q) or broken (F) (s. 168, par. (1)).

* Indicate the component code.

Parts and Procedures	Description of the Defect

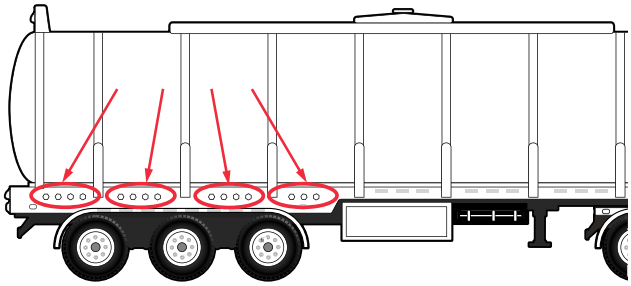

Note:

The percentage of components fixing the tank to its group of axles must be calculated for each side of the vehicle.

A component for positioning (*) the axle or the wheel to the road vehicle is missing, (A**) not securely mounted, (CC**) cracked, (Q**) broken (F**) or damaged (N**) in a way that affects the parallelism of the wheels or that lets the axle or wheel move out of its normal position (s. 168, par. (1.1)).

* Indicate the component code.
** Specify in the comments.

An axle (81) is cracked (Q) or broken (F) (s. 168, par. (4)).

More than 25% of the components (94) fixing a tank to its group of axles are missing (A) or ineffective (V) on an anchorage component (s. 168, par. (8)).

a) Suspension system

Leaf spring

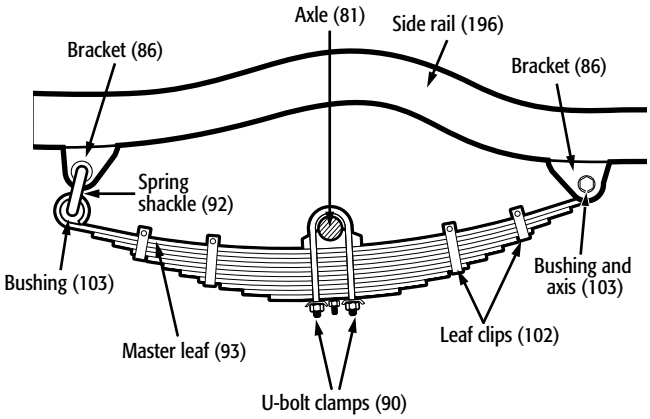

Notes:

- Adding a leaf spring on only one side of the steering axle is allowed for snow removal trucks so as to compensate for the weight of the equipment. It is not necessary to remove this leaf spring outside the snow removal season.
- The helper spring is not a master leaf spring.
- The height of each side of the vehicle must be measured along the centre of the wheel, from the ground to the edge of the fender.

A leaf spring (83) is cracked, (Q) broken, (F) not securely mounted, (CC) missing, (A) repaired by welding (RR) or out of place (EA) (ss. 115, par. (2) and 116).

The suspension (74) is so subsided (AD**) that one side of the vehicle is more than 5 cm (2 in) lower than the other side or allows contact with a rubber bumper (AD**) (s. 116).

** Indicate the measurement in the comments. If applicable, specify "allows contact with a rubber bumper" in the comments.

A leaf spring (83) is so out of place (AC**) that it touches a moving part (s. 168, par. 3).

** Specify in the comments.

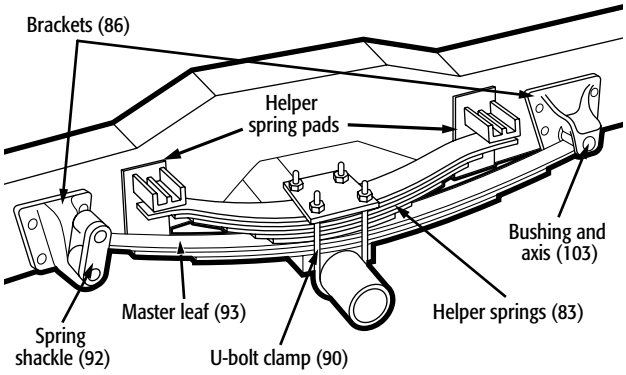

Notes:

- The requirements apply regardless of the number of master leafs.
- "Master leaf" means any leaf in a leaf assembly of which one end touches or extends beyond:
  - the contact surface of the leaf support or equalizing beam (illustration);
  - the spring eye (illustration).

Below are some examples of master leafs.

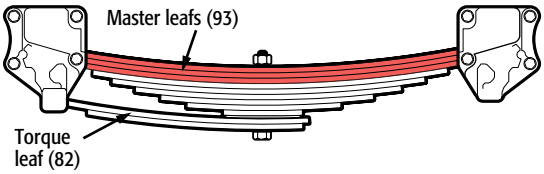

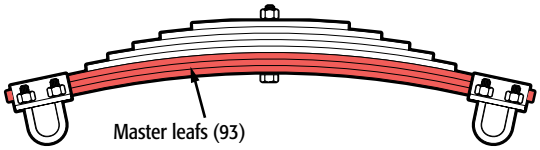

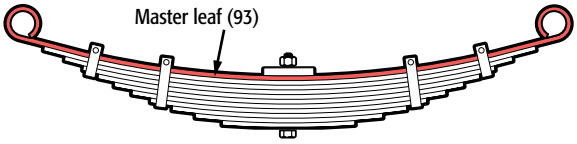

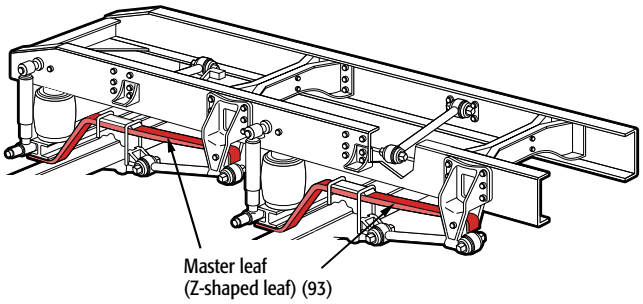

A master leaf (93) or 25% or more of the leaf springs (83) of the assembly are broken (F**) or missing (A**) (s. 168, par. (2)).

** Specify in the comments.

Parts and Procedures	Description of the Defect

Composite leaf spring (104)

Illustration of a major defect concerning a composite leaf spring.

Intersection of cracks of any length

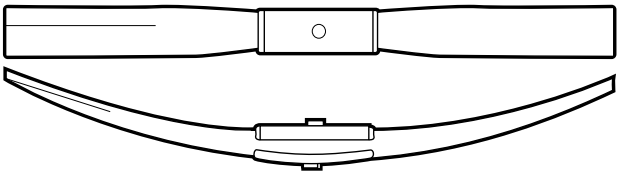

Transverse crack over more than ¾ of the length of the spring

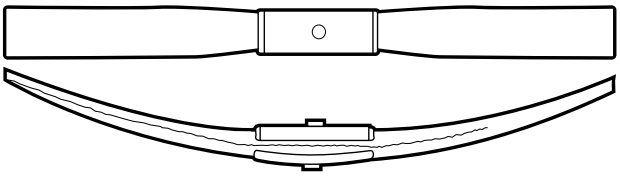

Vertical crack over more than ¾ of the length of the spring

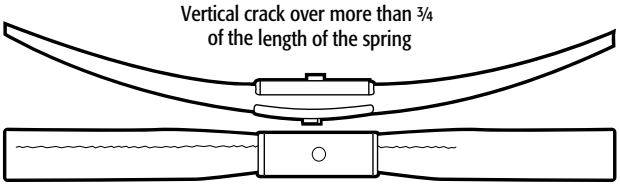

A composite leaf spring (104) is cracked over more than 75% of its length (Q**) (s. 168, par. (3.1)).

** Specify in the comments.

A composite leaf spring (104) has an intersection of cracks (Q**) (s. 168, par. (3.1)).

** Specify in the comments.

Front spring suspension

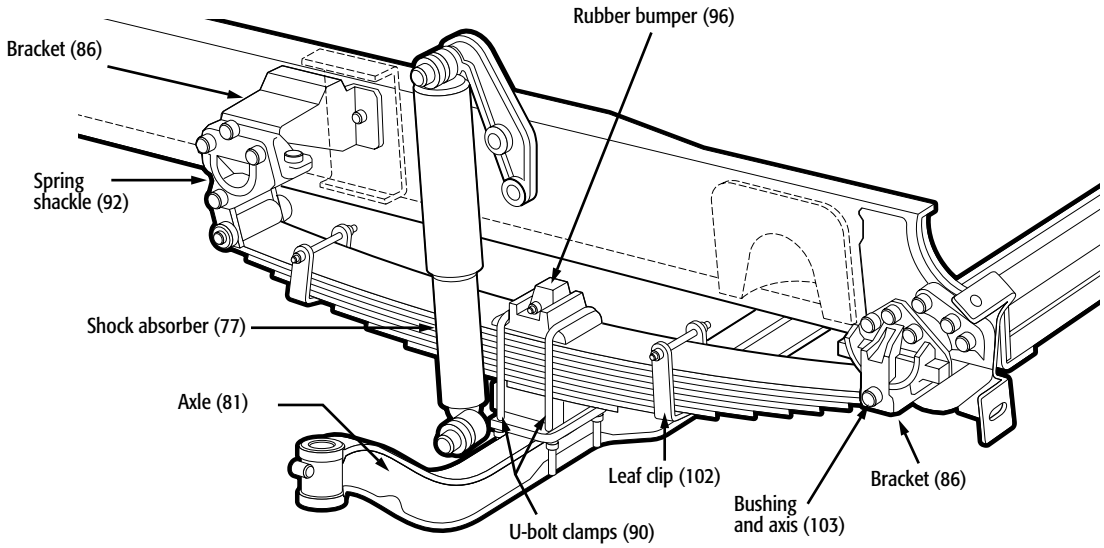

Spring and equalizing beam suspension

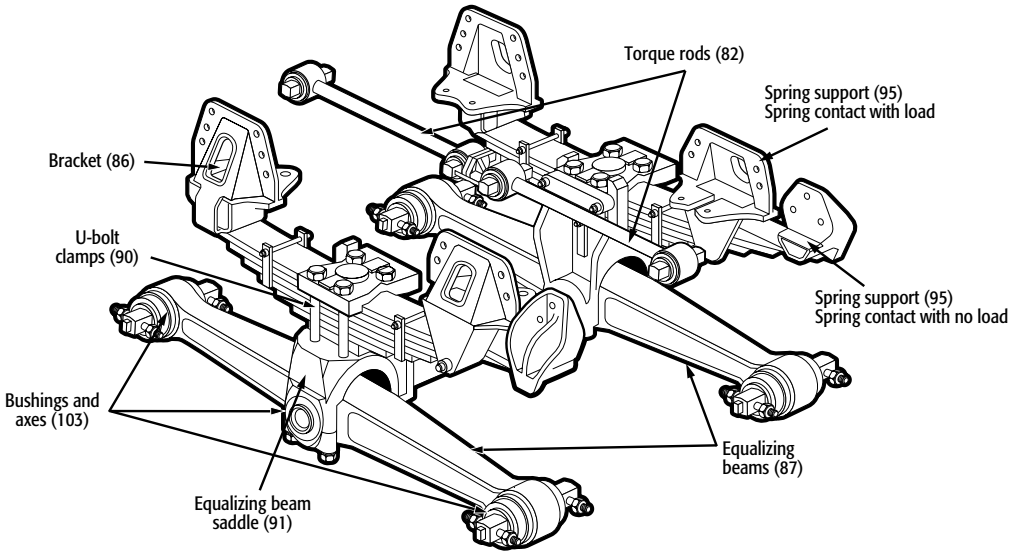

Rubber pad suspension

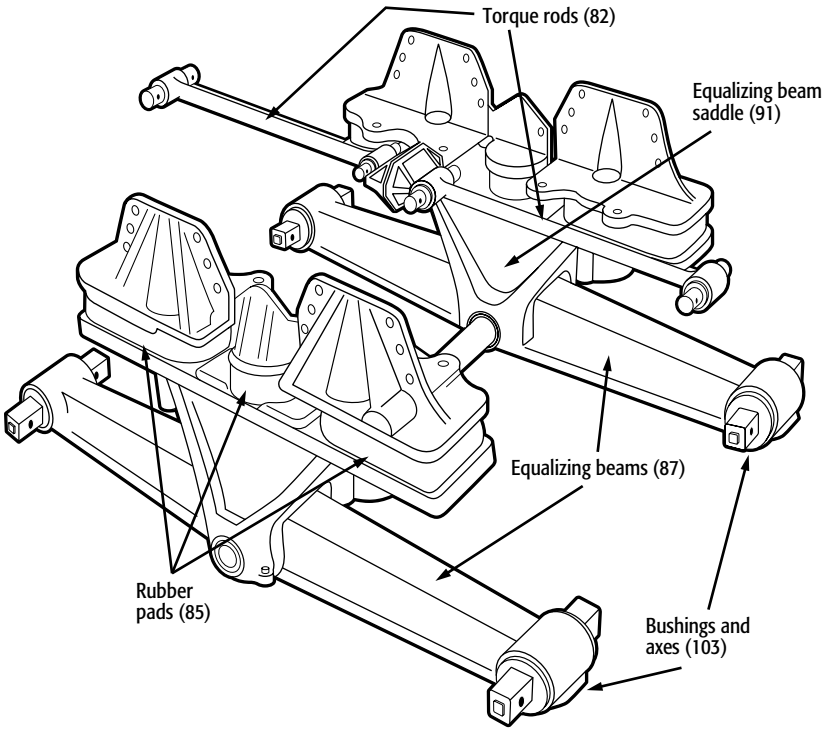

Rubber pad suspension (45° pads)

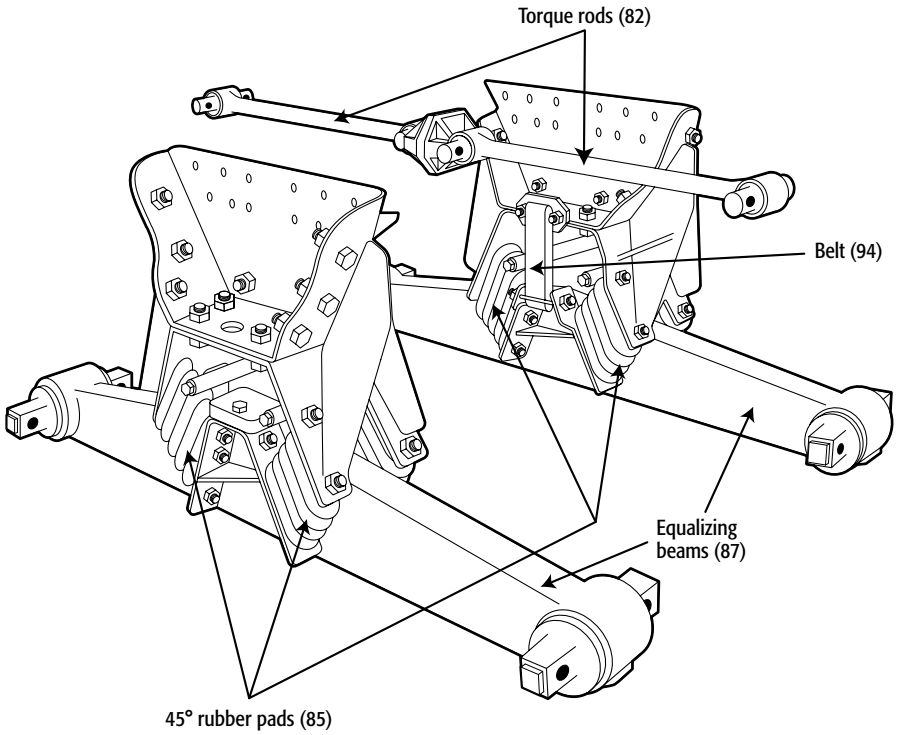

Rubber pad suspension (school bus)

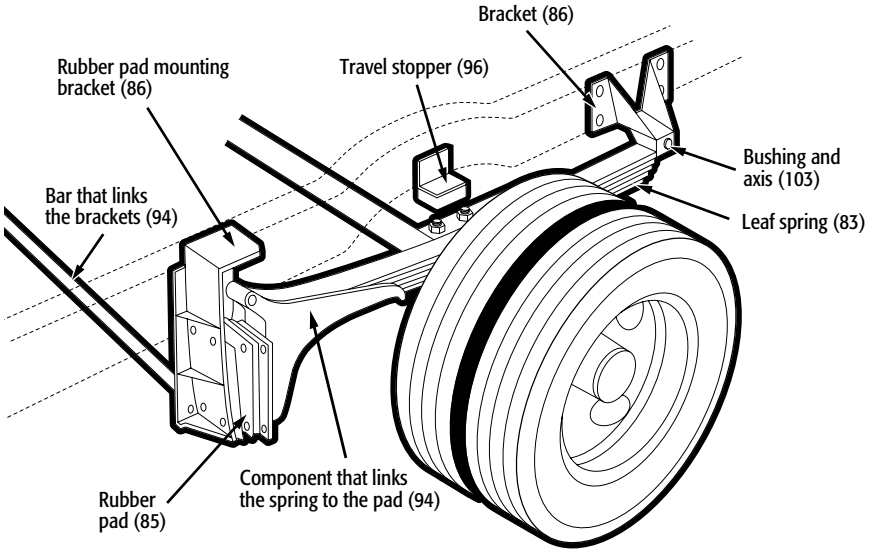

Rubber pad suspension

Note:

When 45° rubber pads are cut, the suspension is still safe; this is a minor defect. For there to be a major defect (s. 168, par. (1)) the belt that links the equalizing beam to the frame must be cut, whether or not the rubber pads are cut. See the illustration on the preceding page.

A rubber pad (85) (other than a rubber bumper) is broken (F) or missing (A) (s. 168, par. (2)).

Coil spring

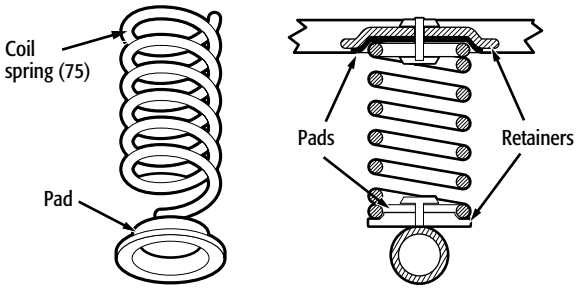

A coil spring (75) is broken, (F) not securely mounted (CC) or was modified by using spacers between the spirals (FF**) (ss. 115, par. (1) and 116).

** Specify in the comments.

The suspension (74) is so sagged (AD**) that one side of the road vehicle is more than 5 cm (2 in) lower than the other side or allows contact with a rubber bumper (AD**) (s. 116).

** Indicate the measurement in the comments. If applicable, specify "allows contact with a rubber bumper" in the comments.

A coil spring (75) is so broken (F**) that the vehicle is completely sagged (s. 168, par. (4)).

** Specify "is completely sagged" in the comments.

A coil spring (75) is so out of place (AC**) that it touches a moving part (s. 168, par. (3)).

** Specify in the comments.

Torsion bar

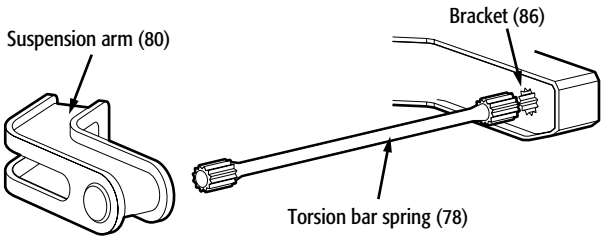

A torsion bar (78) is not securely mounted (CC) or was repaired by welding (RR) (s. 115, par. (2)).

The suspension (74) is so sagged (AD**) that one side of the road vehicle is more than 5 cm (2 in) lower than the other side or allows contact with a rubber bumper (AD**) (s. 116).

** Indicate the measurement in the comments. If applicable, specifiy "allows contact with a rubber bumper" in the comments.

A torsion bar (78) is broken (F) or cracked (Q) (s. 168, par. (4)).

Parts and Procedures	Description of the Defect
b) Leaf clips	A leaf clip (102) is not securely mounted (CC) or missing (A) (s. 115, par. (1)).
c) U-bolt clamps	A U-bolt clamp (90) was repaired by welding (RR) (s. 115, par. (2)). A U-bolt clamp (90) is missing, (A) not securely mounted, (CC) cracked (Q) or broken (F) (s. 168, par. (1)).
d) Leaf spring supports and brackets ***Notes:*** • Welding is permitted to repair a bracket that is welded to the vehicle's frame. Here is a summary of the welds that are authorized and prohibited: Strengthening weld + Bolted or non-bolted part = Authorized weld Repair weld + Bolted part = Prohibited weld Repair weld + Non-bolted part = Authorized weld • A leaf spring support that shows wear in excess of 3.2 mm (1/8 in) in the case of a vehicle with a net weight of less than 5,500 kg or in excess of 6.4 mm (1/4 in) in the case of other vehicles is a minor defect. • To add strength, adding wear plates inside the leaf supports is permitted.	A leaf spring support (95) is not securely mounted, (CC) cracked, (Q) broken, (F) worn (WW**) or shows an indication of welding other than a weld done by the manufacturer (RR) (s. 115, par. (1) and par. (2)). ** Specify the measurement in the comments. A bracket (86) is not securely mounted, (CC) cracked, (Q) broken, (F) or repaired by welding (RR) in the case of parts held in place by bolts or rivets (s. 115, par. (2)).

e) Shackles, bushings and axis

Note:

In certain cases, a pry bar may be required to check the amount of play between the bushing and the axis.

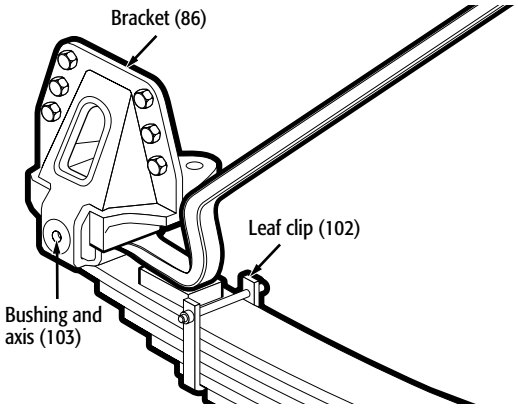

Note:

A flexible bushing is inadequate where, for example, the bushing's flexible material has several deep cuts that could affect its performance.

A shackle (92) is not securely mounted, (CC) warped, (K) cracked (Q) or shows an indication of welding other than a weld done by the manufacturer (RR) (s. 115, par. (2)).

The play between the metal bushing of a spring (103) and the axis exceeds the manufacturer's standards (W**) or, in the absence of such standards, more than 2 mm (3/32 in) for an axis whose diameter is 24 mm (1 in) or less or more than 3.2 mm (1/8 in) in other cases (X**) (s. 116).

** Specify the measurement in the comments.

The flexible bushing (103) is deteriorated, (WA**) worn (WW**) or damaged (N**) in a way that hampers the good working order of the suspension, or is missing (A) or inadequate (IN**) (s. 115, par. (1)).

** Specify in the comments.

Parts and Procedures	Description of the Defect
f) Suspension arms	A suspension arm (80) is warped, (K) damaged, (N) cracked, (Q) perforated by corrosion, (NN) not securely mounted (CC) or shows an indication of welding other than a weld done by the manufacturer (RR) (s. 115, par. (1) and par. (2)).

g) Stabilizer bars and stabilizer bar link kits

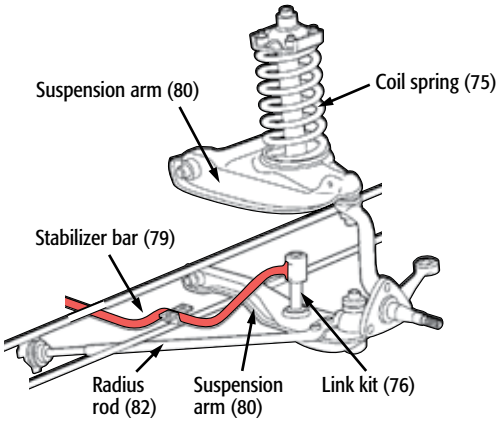

Note:
A pad is inadequate where it is worn to the point of allowing excessive play of the stabilizer bar.

A stabilizer bar (79) or a swaybar link kit (76) is missing, (A) not securely mounted (CC) or is worn, (WW**) deteriorated (WA**) or damaged (N**) in a way that hampers the good working order of the suspension (s. 115, par. (1)).

** Specify in the comments.

A pad (76*) is missing (X) or inadequate (IN) (s. 115, par. (1)).

* Specify "pad" in the comments.

h) MacPherson struts

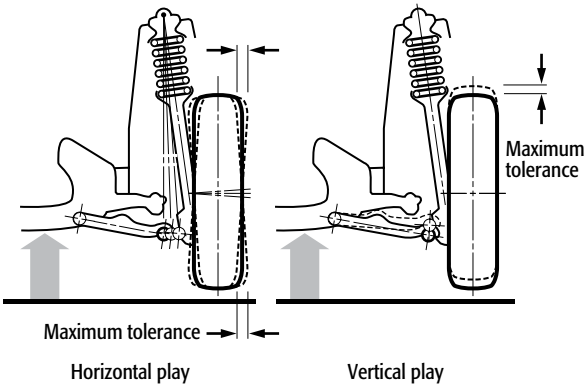

Inspection method:

1. Lift the vehicle until there is no weight on the suspension system;
2. Place your hands on the top and bottom of the tire and swing it back and forth;
3. Check the horizontal play at the outside circumference of the tire;
4. Place a pry bar under the tire and lift it enough to compensate for the weight of the tire and wheel to check for vertical play.

Note:

A strut is worn in a way that hampers the good working order of the suspension where there is horizontal or vertical play of 5 mm (7/32 in) or more.

A strut (98) is worn, (WW**) deteriorated (WA**) or damaged (N**) in a way that hampers the good working order of the suspension (s. 115, par. (1)).

** Specify in the comments.

A strut (98) is damaged (N**) in a way that affects the parallelism of the wheels or lets the wheel move out of its normal position (s. 168, par. (1.1)).

** Specify in the comments.

i) Travel stoppers

Note:

A travel stopper is inadequate where it is severely deteriorated.

A travel stopper (96) is missing, (A) not securely mounted (CC) or inadequate (IN) (s. 115, par. (1)).

Parts and Procedures	Description of the Defect
j) Equalizing beams and suspension bushings ***Notes:*** • Welded repairs to equalizing beams or saddles are prohibited. • The play in the bushings of the equalizing beam can be checked by turning the wheels sharply or checking whether turning the wheels leaves tire marks on the frame. • The centre bushing of an equalizing beam is worn in a way that hampers the good working order of the suspension where there is a play of more than 7 mm (9/32 in). • One or more bushings of an equalizing beam are worn in a way that hampers the good working order of the suspension where there is more than 8 cm (3.2 in) side movement of an axle.	One or more bushings (103) of an equalizing beam are worn (WW**) in a way that hampers the good working order of the suspension (s. 115, par. (1)). ** Specify in the comments. One or more bushings (103) of an equalizing beam allow a tire to touch (WW**) the frame when the wheels are turned (s. 115, par. (6)). ** Specify in the comments. The flexible material of an equalizing beam bushing (103) has cuts (G**) that could hamper performance (s. 119). ** Specify in the comments. An equalizing beam (87) is warped, (K) damaged, (N) not securely mounted (CC) or shows an indication of welding other than a weld done by the manufacturer (RR) (s. 115, par. (2)).
k) Shock absorbers and shock absorber brackets Inspect the absorbers, brackets, bolts and rubber pads. ***Note:*** Shock absorber oozing is not a leak that can hamper its performance.	A shock absorber (77) is not securely mounted, (CC) cracked, (Q) broken (F) or missing (A) (s. 118). There is an oil leak (T) from a shock absorber (77) that could hamper its performance (s. 118). A bracket (86*) is inadequate, (IN) not securely mounted (CC) or cracked (Q) (s. 118). * Specify "of a shock absorber" in the comments. A shock absorber (77) of a pneumatic suspension is missing, (A) broken (F) or not fixed (CC) at one of its ends (s. 168, par. (7)).

I) Air spring and air supply system

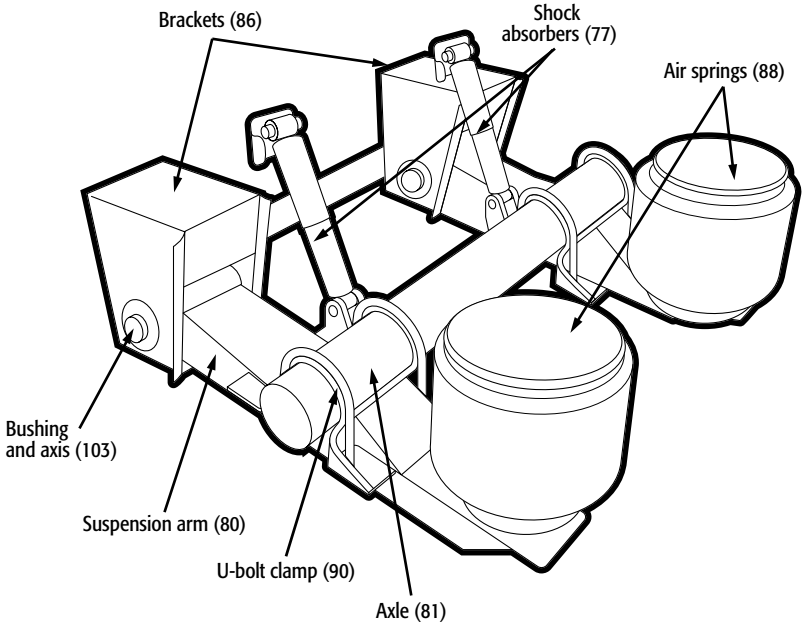

Pneumatic suspension

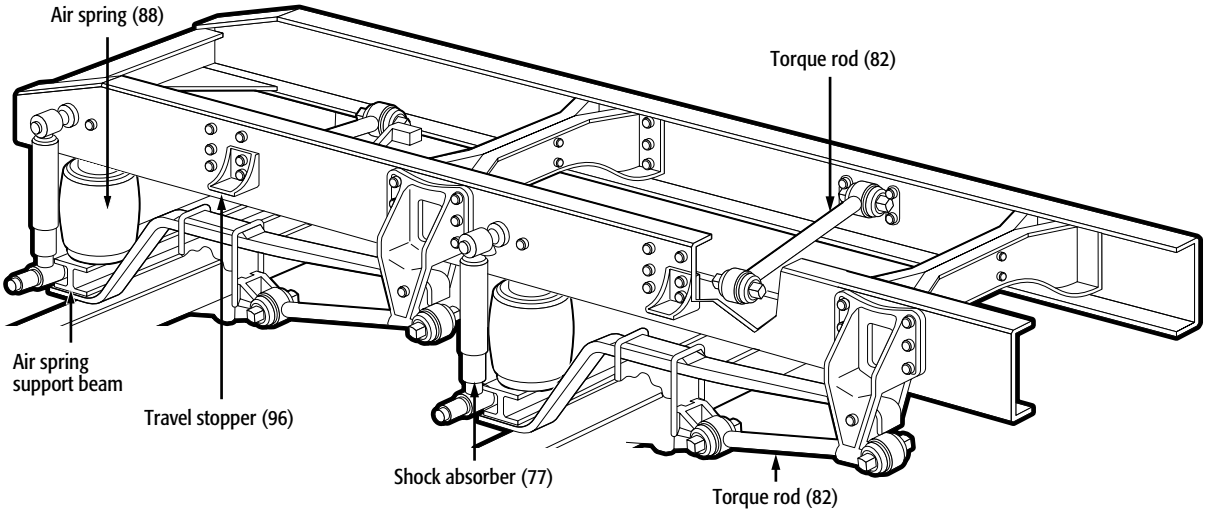

Pneumatic suspension (motor coaches)

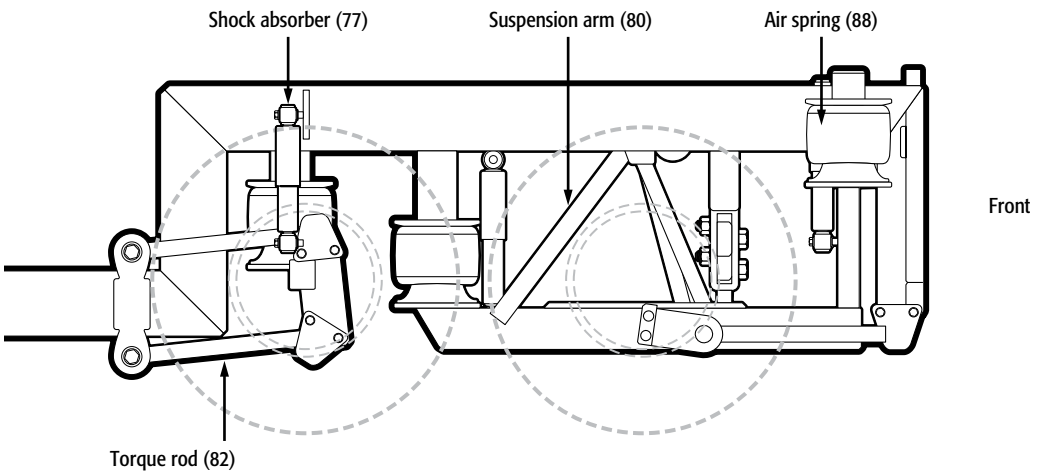

Inspect the air springs and air supply system for a pneumatic suspension.

An air spring (88) is not securely mounted, (CC) so damaged that the cord is exposed (AG) or shows signs of repair (X**) (s. 117).

** Specify in the comments.

A line, (105) a valve, (97) an air spring (88) or a fitting (106) shows an air leak (T) (s. 117).

A line (105) is abraded or so cracked that the reinforcement cord is exposed, (AG) crushed, (LA) crimped, (LA) bored, (LB) bulged, (QQ) broken, (F) welded (RR) or inadequate (IN) (s. 117).

A fitting (106) is excessively worn (WW) or corroded, (NA) bulged, (QQ) broken, (F) welded (RR) or inadequate (IN) (s. 117).

A line (105) is not securely mounted (CC) and vibrates or chafes against adjacent parts (AC) (s. 117).

The pneumatic suspension (84) is supplied with air before the braking circuit reaches 450 kPa (65 psi) (X**) (s. 117).

** Specify in the comments.

An air spring (88) in a pneumatic suspension is absent (A) or deflated (AB) (s. 168, par. (6)).

There is an air leak (T**) in the pneumatic suspension system (84) that cannot be made up for by the compressor where the engine is idling (s. 168, par. (5)).

** Specify in the comments.

Notes:

- A leveling valve is inadequate where it is improperly adjusted or does not work.
- More than one leveling valve can be found on a single vehicle.

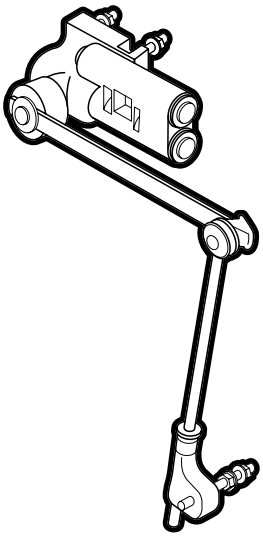

A leveling valve (97) is not securely mounted (CC) or inadequate (IN**) (s. 115, par. (1)).

** Specify in the comments.

m) Torque rods

Inspect the torque rods.

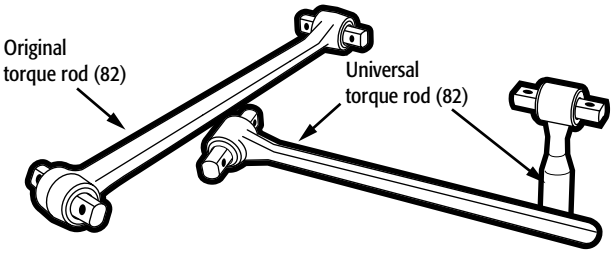

Notes:

- A pad, sleeve or bushing is damaged in a way that hampers the good working order of the suspension where it shows significant play in the axle.
- Welding of a universal torque rod (made of two parts) is allowed, as doing so complies with the standards of manufacturers of this type of torque rod.

A torque rod (82) is not securely mounted, (CC) warped, (K) cracked, (Q) broken (F) or shows an indication of welding other than a weld done by the manufacturer (RR) (s. 115, par. (2)).

A pad, a sleeve or a bushing (103*) is damaged in a way that hampers the good working order of the suspension (WA) (s. 115, par. (1)).

* Specify "of a torque rod" in the comments.

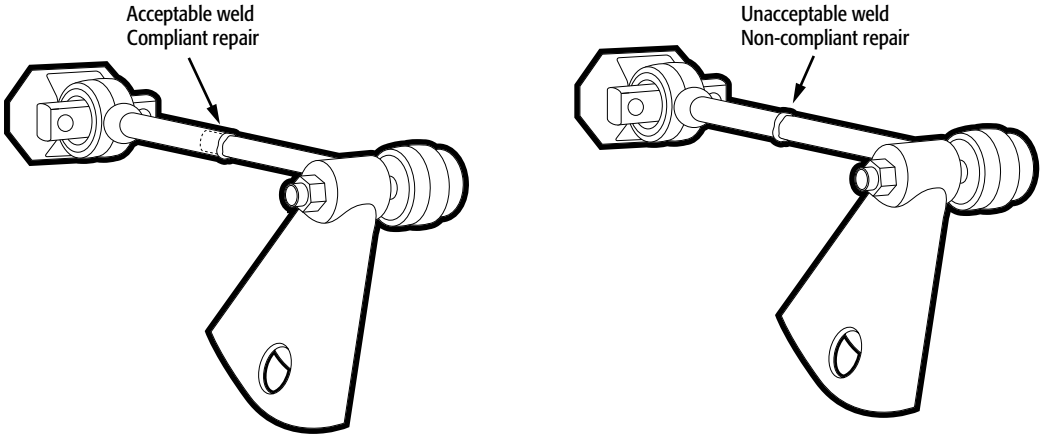
Acceptable weld
Compliant repair
Unacceptable weld
Non-compliant repair

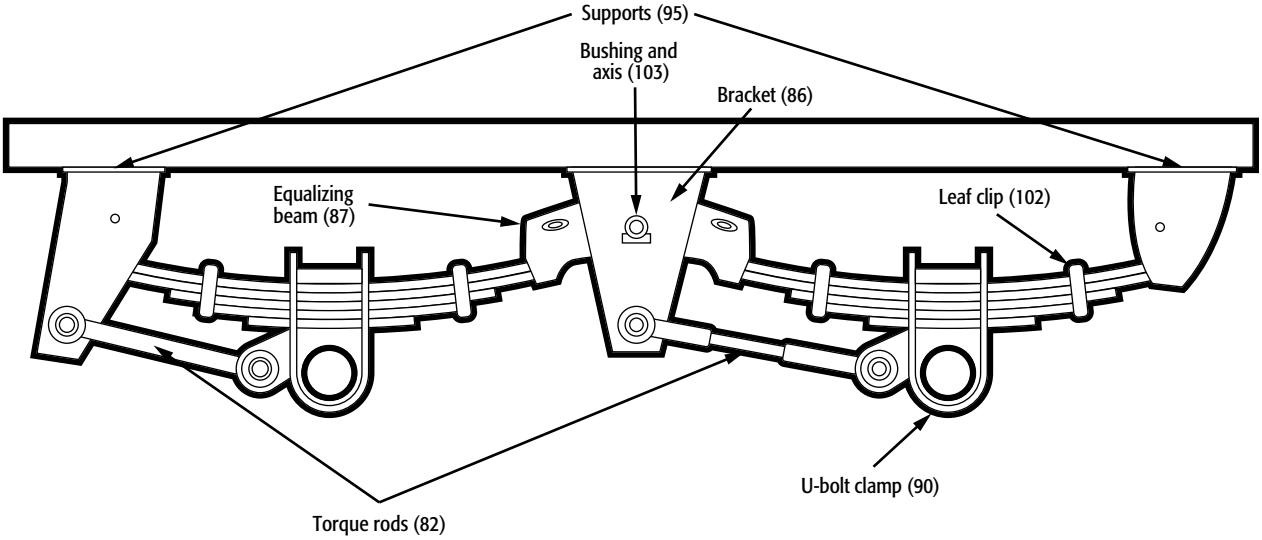
Supports (95)
Bushing and axis (103)
Bracket (86)
Equalizing beam (87)
Leaf clip (102)
U-bolt clamp (90)
Torque rods (82)

4.1 Component and defect codes for the suspension

COMPONENTS	DEFECTS
74 – Suspension	A – Absent/Missing/Not equipped
75 – Coil spring	F – Broken
76 – Link kit	G – Cut/Torn/Abraded/Scraped
77 – Shock absorber	K – Bent/Elongated
78 – Torsion bar	N – Damaged
79 – Stabilizer bar	Q – Cracked/Grooved
80 – Suspension arm	R – Does not work properly
81 – Axle	T – Leak
82 –Torque rod	V – Ineffective/Inoperative
83 – Leaf spring	W – Does not comply with manufacturer's standards
84 – Pneumatic suspension	X – Does not comply with regulatory standards
85 – Rubber pad	Z – Abnormal play
86 – Anchorage	AB – Deflated/Flat
87 – Equalizing beam	AC – Touches/Allows to come in contact with
88 – Air spring	AD – Sagging
90 – U-bolt	AG – Exposes the cord or carcass
91 – Equalizing beam saddle	CC – Not securely mounted
92 – Shackle	EA – Displaced
93 – Master leaf	EE – Improperly tightened/Loose
94 – Fastener (suspension)	FF – Modified/Poorly repaired
95 – Leaf spring support	IN – Inadequate
96 –Travel bumper	LA – Crimped/Crushed
97 – Leveling valve	LB – Twisted
98 – MacPherson strut	MA – Misaligned
102 – Leaf clip	NA – Corroded
103 – Bushing (pad)	NN – Perforated/Holes (caused by rust)
104 – Composite leaf	QQ – Bulged
105 – Line (suspension)	RR – Welded
106 – Pneumatic fitting (suspension)	WA – Damaged/Deteriorated
	WW – Worn

Section 5

Brakes

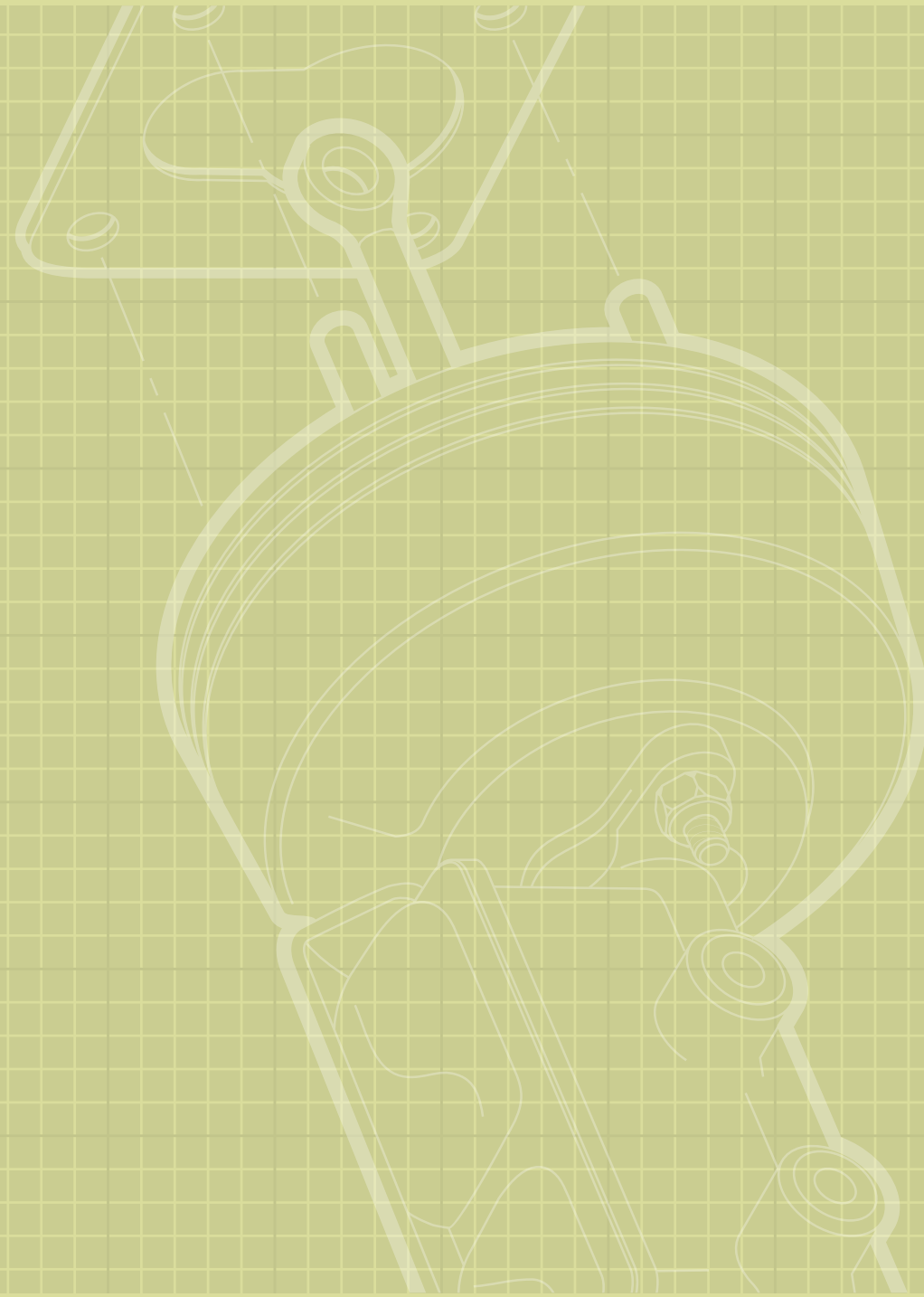

Parts and Procedures	Description of the Defect

General Provisions (ss. 30, 34 and 164)

Notes:

- Where a heavy vehicle was manufactured with a service brake system on the steering axle, the system must be present and in good working order.
- Every tractor semi-trailer manufactured after May 7, 1993 must be equipped with service brakes on the steering axle. In addition, where a tractor semi-trailer manufactured before May 8, 1993 is converted into a straight-body truck, brakes must be fitted on the steering axle.
- Unless an assembly plan of a straight-body truck confirms that the truck was not manufactured with service brakes on its steering axle, every straight-body truck must be equipped with service brakes on its steering axle. The truck's VIN must be indicated on the assembly plan.
- Inspection of internal components does not require any disassembly; it can be carried out through the inspection holes provided for this purpose.
- Since June 10, 1987, vehicle registration for converter dollies has no longer been required. However, a mechanical inspection is required if they are mounted under a trailer.
- As of April 1, 1976, federal regulations specify that all converter dollies must be equipped with service brakes. If the converter dolly was manufactured before that date, you can demand that service brakes be mounted only if the converter dolly was so equipped when it was manufactured.

The pedal (130) is not securely attached (CC) or not properly aligned, (MA) operates with excessive friction (U) or is not non-slip (WW) (s. 30, par. (7)).

Where force is applied to the service brake pedal, (133) no rotation resistance can be detected on a wheel (A) (s. 34).

There is no braking or an important reduction in the braking capacity on 20% or more of the wheels or combination of wheels, by reason of the absence (A**) or inadequate operation (IN**) of one or more components of the braking system (*133) (s. 164, par. (1)).

* Indicate the component code or 133.
** Specify the percentage in the comments.

There is no braking (A) on a wheel of the single active steering axle where that axle is equipped with brakes (133) (s. 164, par. (2)).

A component of the brake system (*) is not securely mounted, (CC) missing, (A) crimped, (U) damaged, (N) deteriorated (WA**) or worn (WW**) in a way that considerably reduces the good working order of the brakes (s. 164, par. (5)).

* Indicate the component code.
** Specify in the comments.

20% or more of the wheels or combination of wheels for a road vehicle are contaminated by oil or grease (M**) on the friction surface of a drum, (123) disc (124) or brake linings (125) or are deeply rusted (NA) on both sides of the friction surface of a disc (124) (s. 164, par. (6)).

** Indicate the percentage in the comments.

5.1 Parking brake and service brake (ss. 30, 31 and 39)

Check the parking brake using the following procecure:

1. Park the vehicle on a flat, level surface;
2. Apply and release the parking brake to make sure it is working properly;
3. Apply the parking brake and let the engine idle;
4. Place the gearshift lever in the "D" position in the case of an automatic transmission or, in the case of a manual transmission, the highest gear that will allow a normal forward start;
5. Gently attempt to drive the vehicle forward;
6. Apply the service brake, release the parking brake and gradually release the service brake.

Notes:

- Lowbed trailers whose main surface is no higher than 1.15 m (3 ft 9 in) from the ground are not required to be equipped with parking brakes.
- The parking brake cannot be checked on certain heavy vehicles equipped with an automatic transmission because the transmission cannot be shifted into gear while the parking brake is engaged.

The mechanism (135*) is inoperative (V) (s. 30, par. (9) and s. 31, par. (1)).

** Specify which component in the comments.

a) Working order

The parking brake (135) does not prevent the vehicle from moving (V) (s. 39, par. (2)).

The parking brake (135) is released and the wheels are not completely free to turn (U) (s. 39, par. (2)).

b) Brake linings

Note:

Parking brake linings are often separate from the service brake linings in the case of trucks and buses equipped with hydraulic brakes.

A brake lining (125) is unbound, (QA) broken, (F) contaminated (M) by oil or grease, cracked (Q**) more deeply than half the remaining surface, not securely attached (CC) or worn (WW) in an extremely uneven way (s. 31, par. (3)).

** Specify in the comments.

A brake lining (125) that is distinct from the service brake linings is less than 1.6 mm (1/16 in) thick at the thinnest point (WW**) excluding the bevelled part (s. 31, par. (2)).

** Specify the measurement in the comments.

c) Warning light (where applicable)

Note:

With regard to the warning light, additional requirements apply to military-type road vehicles. (Refer to Appendix 4.).

The warning light (5*) does not come on (HH) when the parking brake is applied or does not turn off when released (X**) (s. 39, par. (1)).

* Indicated "for the brakes" in the comments.
** Indicate "does not turn off" in the comments.

d) Cables (where applicable)

A cable (158) is weakened (frayed), (B) seized up, (U) missing, (A) disconnected, (MI) not securely attached (CC) or broken (F) (s. 31, par. (1)).

5.1.1 Hydraulic locking service brake

The locking service brake is a device installed in the hydraulic circuit to maintain pressure in the system in order to increase the stability of vehicles that are used to perform various types of work (e.g. a truck fitted with a boom lift). Such a device is authorized where it is equipped with the following components in good working order:

- A pressure accumulator that can compensate for losses that occur as a result of temperature variations.
- A low pressure warning buzzer to indicate insufficient pressure for the system to work properly.
- A pressure cutter that adjusts the pressure applied or imposes a limit.

The locking service brake (134) is not equipped with an adequate (X**) accumulator, low pressure warning buzzer or pressure cutter (s. 39, par. (4)).

** Specify in the comments.

The locking service brake (134) does not prevent the vehicle from moving when applied (V) (s. 39, par. (2)).

5.2 Hydraulic brake system (ss. 30, 31, 35, 37, 164 and 165)

5.2.1 Fluid power circuit

Visually inspect the following components.

Note:

Oozing can be detected when a component is damp, whereas a leak leaves a drop of liquid or a trace on the ground.

Drawbar (185) with a master cylinder (116) for hydraulic brakes

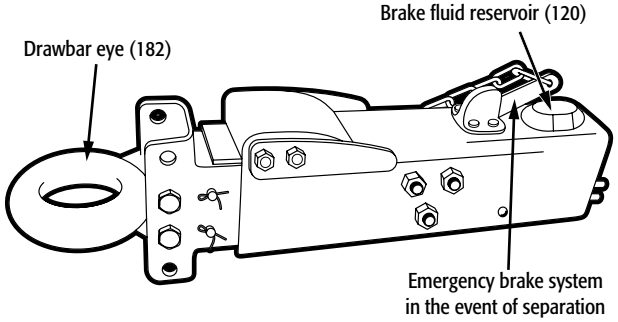

With or without service brake (133) application, there is oozing (TA) along the system (*, 133) (s. 30, par. (3)).

* Indicate the component number or 133.

With or without brake (133) application, there is a leak (T) of brake fluid along the system other than oozing (s. 165, par. (3)).

* Indicate the component number or 133.

Parts and Procedures	Description of the Defect

a) Lines

Notes:

- The use of copper tubing is prohibited unless otherwise indicated by the manufacturer.
- The soft plastic sheathing of a flexible line is not the first reinforcement braid.

A line (118) is crushed, (LA) crimped, (LA) broken, (F) welded, (RR) twisted, (LB) excessively worn, (WW), excessively corroded (NA) or inadequate (IN) (s. 30, par. (4)).

A nylon or rubber line (118) is abraded (G) or so cracked (Q) that the reinforcement cord is exposed (s. 30, par. (4)).

The fitting of a line (118) is not tightened enough (EE) to prevent the line from vibrating or chafing (AC) against an adjacent part (s. 30, par. (4)).

A flexible line (118) is worn to the second braid (WW**) or bulges when under pressure (QQ) (s. 165, par. (1)).

** Specify in the comments.

b) Fittings

A fitting is inadequate where it is unapproved for the purpose for which it is used (e.g. a garden hose clamp; a compression fitting).

A fitting (143) is worn (WW) or excessively corroded, (NA) welded (RR) or inadequate (IN) (s. 30, par. (4)).

c) Master cylinder and reservoir

- Visually inspect the master cylinder and its fasteners and fittings.
- Check the fluid level.

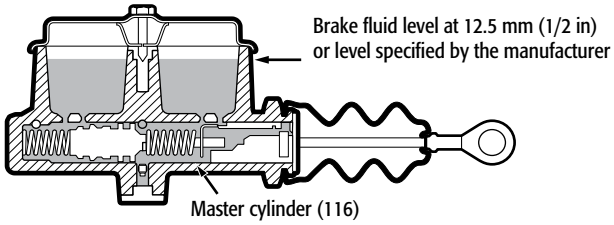

Note:

If the cover needs to be removed to check the fluid level in the reservoir, the cover should be cleaned as needed to avoid contaminating the brake fluid.

Brake fluid reservoir (clear) (120)

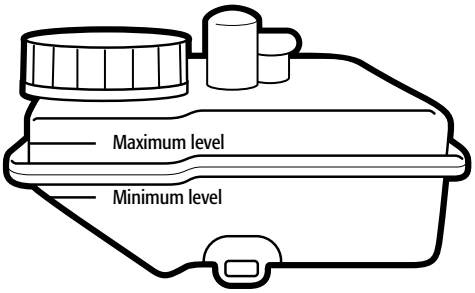

The master cylinder (116) is not securely mounted (CC) or shows signs of oozing (TA) (s. 30, par. (5)).

The brake fluid level (132) is below the minimum level specified by the manufacturer (JJ) or, where no level is specified, lower than 12.5 mm (1/2 in) below the edge of the filler opening (JJ) (s. 30, par. (5)).

The reservoir cover (120*) is missing (A) (s. 30, par. (5)).

* Specify "cover" in the comments.

The level of the fluid (132) in the reservoir of the master cylinder is lower than one quarter of the maximum level specified by the manufacturer (X**) (s. 165, par. (2)).

** Specify in the comments.

d) Brake cylinders and calipers

Visually inspect the components.

Note:

Oozing can be detected when a cylinder is damp, whereas a leak leaves a drop of liquid or a trace on the ground.

A cylinder (121) shows signs of oozing (TA) or the piston (121) is seized up (U) (s. 31, par. (6)).

A caliper (122) is seized up, (U) cracked, (Q) broken, (F) not securely fixed, (CC) not properly installed (MI) or shows signs of oozing (TA) (s. 31, par. (11)).

e) Warning light

- Turn the ignition switch to the "ON" position with the engine turned off, or to the "START" position and check to see if the light comes on.
- Start the engine and depress the brake pedal with considerable force (approximately 550 N [125 lb] or 265 N [60 lb] in the case of hydraulic power brakes) for one minute, and check to see if the light comes on.

Notes:

- Make sure the parking brake is disengaged if it shares the same warning light.
- With regard to the warning light, additional requirements apply to military-type road vehicles. (Refer to Appendix 4).

The warning light (5*) does not come on when the ignition key is in the "ON" position while the engine is not running or in the "START" position (HH) (s. 35).

* Specify "for the brakes" in the comments.

The warning light (5*) comes on while the engine is running (X**) (s. 35).

* Specify "for the brakes" in the comments.
** Specify in the comments.

The warning light (5*) comes on when considerable force is applied to the brake pedal (X**) (s. 35).

* Specify "for the brakes" in the comments.
** Specify in the comments.

5.2.2 Hydraulic brake pedal

Check the travel of the brake pedal using the following procedure:

1. Start the engine;
2. Measure the distance between the pedal and the floor;
3. Depress the brake pedal with considerable force (approximately 550 N [125 lb] or 265 N [60 lb] in the case of hydraulic power brakes) for one minute;
4. Measure the residual distance between the pedal and the floor.

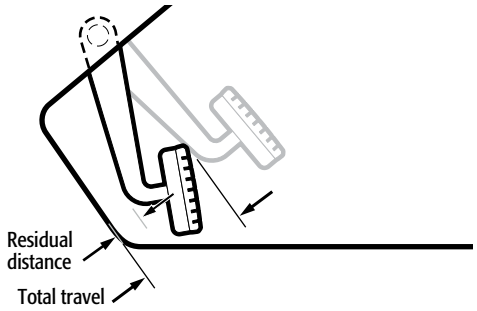

$$\text{Pedal travel percentage} = \frac{\text{Total travel} - \text{Residual distance}}{\text{Total travel}} \times 100$$

The pedal drops (130) when force is applied (X**) (s. 35).

The travel of the pedal (130) exceeds 65% of the total possible travel (X**) (s. 35).

** Specify in the comments.

The pedal (130) has to be depressed several times in order to pressurize the circuit (X**) (s. 165, par. (4)).

The brake pedal (130) reaches the floor in less than 10 seconds (X**) (s. 165, par. (5)).

The travel of the pedal (130) exceeds 80% of the total possible travel (Z**) (s. 165, par. (6)).

** Specify in the comments.

5.2.3 Power brake (hydraulic brake system)

Inspection method:

1. Turn off the engine;
2. Depress the brake pedal several times to eliminate pressure in the accumulator;
3. Then, apply moderate pressure of approximately 90 N (20 lb).
4. Start the engine and check the movement of the pedal. If the pedal does not drop slightly, this means that the power brake does not work.

The belt (137) is cut, (G) shows signs of wear that adversely affects its effectiveness (N**) or is not tight enough (TT) (in a way that allows slippage) (s. 30, par. (1) and par. (11)).

** Specify in the comments.

The belt (137) has a cut that will likely lead to a breakdown (AE) (s. 164, par. (5)).

The power brake (117) is not able to assist the driver for a brake application when the engine is off (V**) (s. 165, par. (7)).

** Specify in the comments.

The power brake (117) does not work (GG) (s. 165, par. (7)).

a) Vacuum brake booster

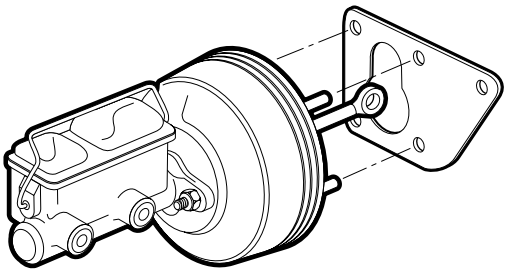

Check the following components:

- The vacuum-operated lines

Note:

A line is inadequate where it was repaired with components that are not appropriate to the purpose for which they are used.

A line (118) is crushed, (LA) crimped, (LA) broken, (F) excessively worn (WW) or inadequate (IN) (s. 30, par. (4)).

A nylon (118) or rubber line (118) is abraded (G) or so cracked (Q) that the reinforcement cord is exposed (s. 30, par. (4)).

The fitting of a line (118) is not tightened enough (EE) to prevent the line from vibrating or chafing (AC) against an adjacent part (s. 30, par. (4)).

Parts and Procedures	Description of the Defect
•The power reserve and warning light or buzzer: **Inspection method:** 1. Start the engine; 2. Wait until the vacuum is established; 3. Turn off the engine; 4. Turn the ignition key to the "ON" position; 5. Depress the brake pedal three times.	The power reserve is insufficient (117) for three assisted braking applications (X**) (s. 37). ** Specify in the comments.
	The warning buzzer (140) or light (5*) does not come on where the vacuum is less than 2 kPa (X**) (s. 37). * Specify "for the brakes" in the comments. ** Specify in the comments.
	Where the vehicle is not equipped with a pressure gauge, when the warning light or buzzer comes on, there is not enough power in reserve (117) for an assisted braking application (X**) (s. 37). ** Specify in the comments.
•Vacuum pump Depress the brake pedal so as to remove any vacuum. Rev the engine to approximately 1,200 RPM.	The vacuum pump (139*) cannot provide and maintain a minimum vacuum (V) of 4.5 kPa (s. 37). * Specify "vacuum" in the comments.
	The vacuum pump (139*) is not securely mounted (CC) (s. 30, par. (2)). * Specify "vacuum" in the comments.
•The reservoir	The reservoir (120) is missing, (A) not securely mounted, (CC) inadequate (IN**) or shows signs of wear that adversely affects its effectiveness (N) (s. 30, par. (2)). ** Specify in the comments.
•The pressure gauge	The pressure gauge (138) is inadequate (IN) (s. 30, par. (12)).
•The filter	The filter (119) is missing (A) or so clogged (M) that the performance of the brake system is reduced (s. 30, par. (6)).

Parts and Procedures	Description of the Defect

b) Hydraulic power brake

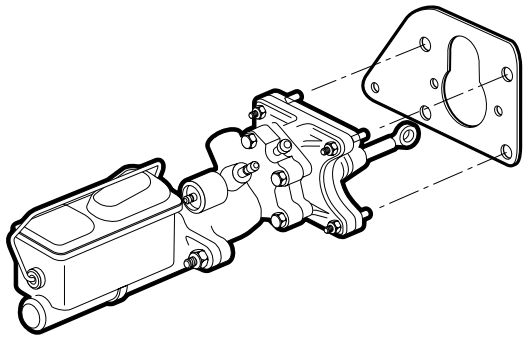

Hydraulic power brake assisted by an electric motor

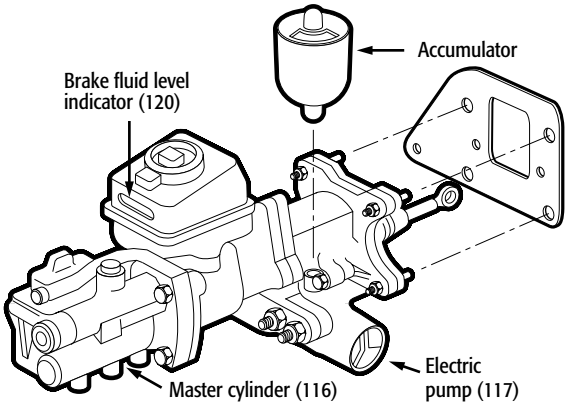

Inspect the electric pump:

- The engine must be turned off.
- The ignition key must be in the "ON" position.

The pump reservoir (120) is not securely mounted, (CC) shows a leak (T) or the fluid is below the minimum level specified by the manufacturer (X**) (s. 30, par. (5)).

** Specify in the comments.

The pump (139*) is not securely mounted (CC) or shows a leak (T) (s. 30, par. (2))

* Specify "electric" in the comments.

The power brake is unable to assist the driver for a brake application where the electric pump (139*) does not work (GG) (s. 165, par. (7)).

* Specify "electric" in the comments.

5.3 Anti-lock brake system (s. 30)

Turn the ignition key to the "ON" position and check to make sure the warning light comes on and turns off.

Dashboard ABS warning light (5)

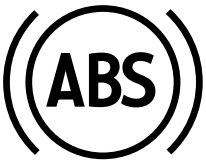

The dashboard warning light (5*) does not come on (HH) during the self-test cycle or always stays on (R) (s. 30, par. (8)).

* Specify "for ABS" in the comments.

The outside warning indicator (145) does not come on (HH) during the self-test cycle or always stays on (R) (s. 30, par. (8)).

Notes:

- In certain heavy vehicles, if the light stays on after a few seconds, the vehicle must be driven at a speed above 10 km/h for the warning light to turn off.
- An ABS system is inadequate where there are visual signs that parts have been removed or modified.
- Transport Canada requires that tractor trucks, straight-body trucks, trailers, semi-trailers and buses manufactured since April 1, 2000 and equipped with a pneumatic brake system also be equipped with ABS brakes.

Outside ABS warning indicator *(145)*

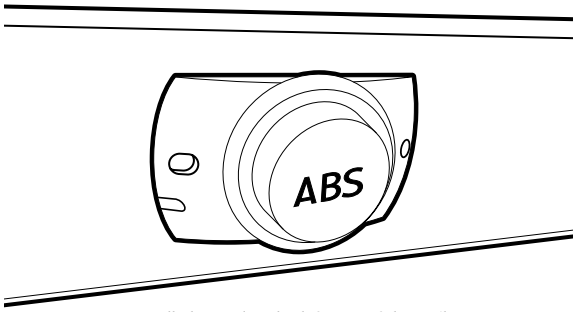

Usually located at the left rear of the trailer

The antilock brake system (145) with which the road vehicle was equipped when it was manufactured is missing (A) or inadequate (IN**) (s. 30, par. (8)).

** Specify in the comments.

5.4 Electric brake system (also known as an electromagnetic brake system) (s. 30 and 31)

In addition to the common components of all brake systems (fasteners, drums, linings, etc.), check the electromagnets, the wiring and the grounding.

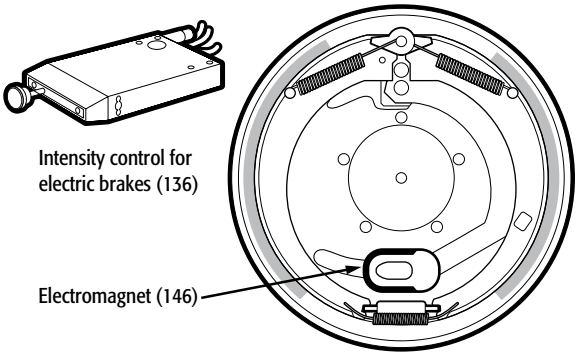

Electric brake

An electromagnet (146) is missing, (A) not securely fixed (CC) or inadequate (IN**) (s. 31, par. (12)).

** Specify in the comments.

An electric cable (21*) or an electric connector (25*) is worn (WW**) in a way that hampers the good working order of the brakes, is missing, (A) short-circuited, (AF) broken, (F) frayed, (F) cracked (Q) or not securely attached to the appropriate fasteners or connection (CC) (s. 30, par. (10)).

* Specify "for the brakes" in the comments.
** Specify "in a way that hampers" in the comments.

The electric brake circuit (133) is not independent of another circuit (X**) (s. 30, par. (10)).

** Specify in the comments.

The coupling device (133) is used as a ground (X**) (s. 30, par. (10)).

** Specify in the comments.

5.5 Pneumatic brake system (ss. 30, par. (4); 38, par. (10); and 166, par. (1))

Inspect the following components:

a) Lines

Note:

A line is inadequate where it is not of a type that is approved for the purpose for which it is used.

A line (118) is crushed, (LA) twisted, (LB) crimped, (LA) abraded (WW) or so cracked (Q**) that the reinforcement cord is exposed, excessively worn, (WW) excessively corroded, (NA) broken, (F) welded (RR) or inadequate (IN**) (s. 30, par. (4)).

** Specify "that the cord is exposed" in the comments.

A line (118) has an air leak (T) (s. 38, par. (0.1)).

The fitting of a line (118) is not tightened enough (EE) to prevent the line from vibrating or chafing against an adjacent part (AC) (s. 30, par. (4)).

A flexible line (118) bulges when under pressure (QQ) (s. 166, par. (1)).

A thermoplastic line (118) is worn (WW**) to the second layer of colour or the second braid (AG) (s. 166, par. (1)).

** Specify in the comments.

b) Couplings or glad hands

Glad hands (131) for pneumatic brakes

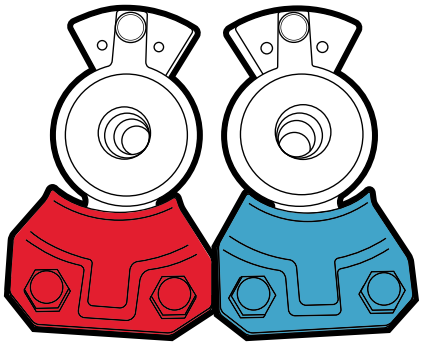

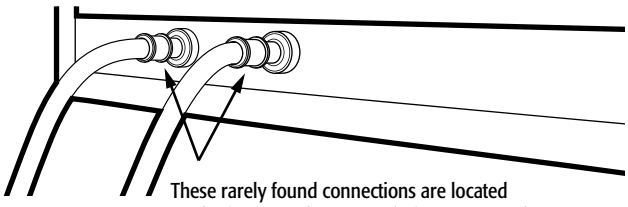

These rarely found connections are located on the frame, at the rear end of a tractor truck and under the semi-trailer.

Note:

A glad hand can be replaced with a regular coupling.

A coupling (143) or a glad hand (131) is excessively worn (WW) or corroded, (NA) broken, (F) not securely mounted (CC) or has a leak (T) (s. 30, par. (2) and par. (4); s. 38, par. (0.1).

A line coupling (143) does not comply with the manufacturer's standards (W**) for its application (s. 166, par. (2)).

** Specify in the comments.

Parts and Procedures	Description of the Defect
c) Air reservoirs ***Note:*** An air reservoir is inadequate where it is not appropriate for the purpose for which it is used. Inspect the following components: •The mounting brackets and straps •The drain taps	An air reservoir (120) is inadequate, (IN**) not securely mounted, (CC) cracked, (Q) excessively corroded (NA) or has welds other than those made by the manufacturer (RR) or has a leak (T) (s. 30, par. (13) and s. 38, par. (0.1)). ** Specify in the comments. A reservoir support (149*) is cracked, (Q) broken (F) or missing (A) (s. 30, par. (2)). * Specify "of the reservoir" in the comments. A non-adapted (W**) replacement part (149*) is used (e.g. a chain) (s. 30, par. (2)). * Specify "of the reservoir" in the comments. ** Specify in the comments. A drain tap (147) is missing (A) or inadequate (IN**) (s. 38, par. (5)). ** Specify in the comments.
d) Air compressor and mounting bracket ***Note:*** The engine must be turned off when these inspections are carried out. Inspect the following components: •The belts •The air filter •The pressure gauge •The pulley	The filter (119) is missing (A) or so clogged (M) that the performance of the brake system is reduced (s. 30, par. (6)). The pressure gauge (138) is missing (A) or inadequate (IN) (s. 30, par. (2) and par. (12)). The belt (137) is cut (G) or deteriorated (N**) in a way that adversely affects its effectiveness or is not tight enough (TT) (so as to allow slippage) (s. 30, par. (2) and par. (11)). ** Specify in the comments. The air compressor (128) is not securely mounted (CC) (s. 166, par. (4)). The drive belt (137) of the compressor has a cut that will very likely lead to a breakdown (AE) (s. 166, par. (3)). The pully (129) is cracked (Q) or broken (F) (s. 166, par. (4)).

5.6 Working order of the pneumatic brake system (ss. 38 and 166)

a) Compressor performance

Inspection method:

1. Reduce the air pressure to below 350 kPa (50 psi).
2. Rev the engine at a moderate RPM without exceeding 1,200 RPM
3. Take note of how long it takes to raise the pressure from 350 to 620 kPa (50 to 90 psi).

The air pressure recovery time (128) is longer than three minutes (X**) (s. 38, par. (1)).

** Specify in the comments.

The compressor (128) is unable to reach or maintain a minimum pressure of 620 kPa (90 psi) while the engine is idling, the service brake is fully applied and the parking brake is released (V**) (s. 166, par. (4)).

** Specify in the comments.

b) Pressure regulator

Let the engine run.

Inspect the following components:

- The pressure at which the compressor is stopped
  - Read the pressure gauge when the regulator cuts the pressure.
- The pressure at which the compressor starts
  1. Place chocks under the wheels and release the parking brake;
  2. Apply the service brakes quickly and several times to reduce the air pressure;
  3. Take the reading on the pressure gauge when the regulator starts on the compressor.

The air pressure is not between 805 and 945 kPa (117 and 137 psi) (X**) when the regulator (148) stops the compressor (s. 38, par. (2)).

The air pressure is equal to or below 550 kPa (80 psi) (X**) when the regulator (148) starts the compressor (s. 38, par. (2)).

** Specify in the comments.

c) Low pressure buzzer, light or visual device

Reduce the air pressure in the system to below 380 kPa (55 psi) and check the warning devices.

Notes:

- A wigwag is considered a visual warning device.
- With regard to low pressure warning buzzers, lights and visual devices, additional requirements apply to military-type road vehicles. (Refer to Appendix 4).

The vehicle's low pressure warning buzzer (140*) does not work when the air pressure in the system is below 380 kPa (55 psi) (X**) (s. 38, par. (3)).

* Specify "buzzer for the brakes" in the comments.
** Specify in the comments.

The vehicle's low pressure warning light (5*) and visual device (140*) do not work when the air pressure in the system is below 380 kPa (55 psi (X**) (s. 38, par. (3)).

140* Specify "visual device for the brakes" in the comments.
5* Specify "for the brakes" in the comments.
** Specify in the comments.

None of the low pressure warning buzzers, (140*) lights (5*) and visual devices (140*) work when the pressure is below 380 kPa (55 psi) (GG) (166, par. (10)).

5* Specify "for the brakes" in the comments.
140* Specify "visual device or buzzer for the brakes" in the comments.

d) Air pressure

- Check the air pressure while applying the service brake

With the air pressure at its maximum, the parking brake disengaged and the engine turned off, depress the service brake as far as possible and read the pressure loss on the pressure gauge for one minute.

Note:

When this inspection is performed on a combination of vehicles:

Where a major defect under paragraph (5) of section 166 is detected on a combination of vehicles, the defect may be assigned to the semi-trailer where a significant air leak is detected in the semi-trailer and there does not appear to be a leak in the truck.

- Perform the inspection (maximum air pressure, engine turned off, parking brake disengaged, service brakes applied for one minute) using the pressure gauge to determine the amount of air loss.
- If the air loss exceeds the amount allowed, determine to which vehicle the major defect must be assigned.
- Disconnect the air hoses between the truck and the semi-trailer and perform the inspection again with the truck only.

The major defect can be assigned to all of the vehicles in a combination of vehicles if the air leaks come from two or three vehicles.

There is an audible air leak (T) in the system (133) (s. 38, par. (0.1)).

The air pressure loss (133) after the service brake has been applied for one minute exceeds (T**):

- single-unit vehicle: 20 kPa (3 psi)
- two vehicles: 28 kPa (4 psi)
- three vehicles: 35 kPa (5 psi)

(s. 38, par. (10) and par. (11)).

* Indicate the component number or 133.
** Specify the pressure in the comments.

The air pressure loss (133) after the service brake has been applied for one minute exceeds (T**):

- single-unit vehicle: 40 kPa (6 psi)
- two vehicles: 48 kPa (7 psi)
- three vehicles: 62 kPa (9 psi)

(s. 166, par. (5))

* Indicate the component number or 133.
** Specify the pressure in the comments.

e) Check valves of air brake reservoirs

With the air pressure at its maximum, open the drain tap of the supply reservoir. The check valve should close and retain air in the service reservoirs.

The valve (144*) is missing (A) or does not close (GG) (s. 38, par. (5)).

* Specify in the comments.

f) Relay valve

Release the parking brake, apply the service brakes and check the brake chambers supplied by the relay valve. Release the brakes and listen for the air being released from the valves.

When the brakes are released, the holes in the relay valve (144) do not let air out quickly (V) (s. 38, par. (6)).

The relay valve (144) is not securely fixed (CC) (s. 38, par. (6)).

Parts and Procedures	Description of the Defect
g) Truck tractor protection valve ***Note:*** Applies to all motorized vehicles hauling a trailer or a semi-trailer equipped with pneumatic brakes. **Inspection method:** 1. Place chocks under the wheels; 2. Raise the air pressure to at least 700 kPa (100 psi); 3. Turn off the engine and press the air supply valve button for the trailer or semi-trailer as well as the control button for the tractor truck parking brake; 4. Disconnect the air hoses from the trailer or semi-trailer (red) and the service hose (blue); 5. Check for the expulsion of compressed air from the glad hand of the supply hose (red); 6. Take note of the pressure at which the protection valve cuts the air supply; 7. Apply the service brakes and check to make sure the protection valve also cuts the service hose circuit (blue).	The protection valve (142) of the tractor truck does not maintain a minimum air pressure of 420 kPa (60 psi) of air pressure (X**) (s. 38, par. (7)). ** Indicate the pressure in the comments. **While the road vehicle is coupled to a trailer or semi-trailer:** The protection valve (142) of the tractor truck does not maintain a minimum of 138 kPa (X**) (20 psi) or is absent (A) while it is towing a trailer or semi-trailer equipped with pneumatic brakes (s. 166, par. (6)). ** Indicate the pressure in the comments.

5.7 Working order of the mechanical components of the pneumatic brake system (ss. 31, 38 and 166)

a) Brake camshaft Place chocks under the wheels, release the parking brake and the service brake and, using a micrometer, measure the play between the pads and the brake camshaft.	The radial stroke between the camshaft (126) and its pads exceeds 2.1 mm (Z**) (3/32 in) (s. 38, par. (12)). ** Indicate the measurement in the comments.

b) Brake chamber push rod
S-cam brakes

Note:

1. Release the parking brake;
2. Make a reference mark on the push rod;
3. Fully depress the service brake when the pressure gauge indicates a reading between 621 kPa and 690 kPa (between 90 to 100 psi) and measure the stroke of the push rod.

Note:

100 psi is the recommended pressure to recreate brake temperature during normal use.

Adjustment of a brake cam

Brakes disengaged

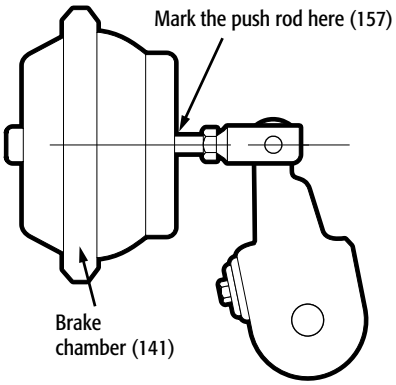

Brakes engaged

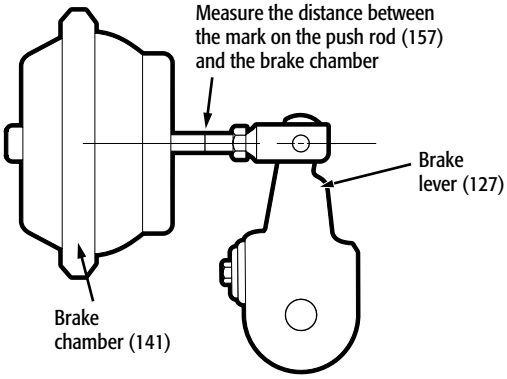

The stroke of the push rod (157) on a single axle exceeds 6.4 mm (L) (1/4 in) (s. 38, par. (9)).

The stroke of the push rod (157) exceeds the maximum adjustment specified by the manufacturer (BB**) indicated in the following table (s. 38, par. (9)).

** Indicate the measurement in the comments.

The stroke of the push rod (157) of 20% or more of the brake chambers of a road vehicle exceeds by 6.4 mm (1/4 in) or more the maximum setting value provided by the manufacturer (BB**) indicated in the following table (s. 166, par. (9)).

** Indicate the measurement and the percentage in the comments.

Brake chamber

Clamp type brake chamber

TYPE	OUTSIDE DIAMETER	MAXIMUM VALUE PROVIDED BY THE MANUFACTURER	MAXIMUM VALUE PROVIDED BY THE MANUFACTURER + 6.4 mm
6	114 mm (4 ½ in)	31.8 mm (1 1/4 in)	38.1 mm (1 1/2 in)
9	133 mm (5 1/4 in)	34.9 mm (1 3/8 in)	41.3 mm (1 5/8 in)
12	145 mm (5 11/16 in)	34.9 mm (1 3/8 in)	41.3 mm (1 5/8 in)
16	162 mm (6 3/8 in)	44.5 mm (1 3/4 in)	50.8 mm (2 in)
20	172 mm (6 25/32 in)	44.5 mm (1 3/4 in)	50.8 mm (2 in)
24	184 mm (7 7/32 in)	44.5 mm (1 3/4 in)	50.8 mm (2 in)
30	206 mm (8 3/32 in)	50.8 mm (2 in)	57.2 mm (2 1/4 in)
36	229 mm (9 in)	57.2 mm (2 1/4 in)	63.5 mm (2 1/2 in)

Note:

Service chambers with housings that are permanently crimped and sealed together are considered clamp type chambers even though they do not have a separate clamp band.

Long stroke clamp type brake chamber

TYPE	OUTSIDE DIAMETER	MAXIMUM VALUE PROVIDED BY THE MANUFACTURER	MAXIMUM VALUE PROVIDED BY THE MANUFACTURER + 6.4 mm
12 L	145 mm (5 11/16 in)	44.5 mm (1 3/4 in)	50.8 mm (2 in)
16 L	162 mm (6 3/8 in)	50.8 mm (2 in)	57.2 mm (2 1/4 in)
20 L (2 ½ in rated stroke)	172 mm (6 25/32 in)	50.8 mm (2 in)	57.2 mm (2 1/4 in)
20 LS (3 in rated stroke)	172 mm (6 25/32 in)	63.5 mm (2 1/2 in)	69.9 mm (2 3/4 in)
24 L (2 ½ in rated stroke)	184 mm (7 7/32 in)	50.8 mm (2 in)	57.2 mm (2 1/4 in)
24 LS (3 in rated stroke)	184 mm (7 7/32 in)	63.5 mm (2 1/2 in)	69.9 mm (2 3/4 in)
30 LS	206 mm (8 3/32 in)	63.5 mm (2 1/2 in)	69.9 mm (2 3/4 in)

Note:

Service chambers with housings that are permanently crimped and sealed together are considered clamp type chambers even though they do not have a separate clamp band.

Bolt type brake chamber

TYPE	OUTSIDE DIAMETER	MAXIMUM VALUE PROVIDED BY THE MANUFACTURER	MAXIMUM VALUE PROVIDED BY THE MANUFACTURER + 6.4 mm
A	176 mm (6 15/16 in)	34.9 mm (1 3/8 in)	41.3 mm (1 5/8 in)
B	234 mm (9 3/16 in)	44.5 mm (1 3/4 in)	50.8 mm (2 in)
C	205 mm (8 1/16 in)	44.5 mm (1 3/4 in)	50.8 mm (2 in)
D	133 mm (5 1/4 in)	31.8 mm (1 1/4 in)	38.1 mm (1 1/2 in)
E	157 mm (6 3/16 in)	34.9 mm (1 3/8 in)	41.3 mm (1 5/8 in)
F	279 mm (11 in)	57.2 mm (2 1/4 in)	63.5 mm (2 1/2 in)
G	251 mm (9 7/8 in)	50.8 mm (2 in)	57.2 mm (2 1/4 in)

Rotochamber

TYPE	OUTSIDE DIAMETER	MAXIMUM VALUE PROVIDED BY THE MANUFACTURER	MAXIMUM VALUE PROVIDED BY THE MANUFACTURER + 6.4 mm
9	109 mm (4 9/32 in)	38.1 mm (1 1/2 in)	44.5 mm (1 3/4 in)
12	122 mm (4 13/16 in)	38.1 mm (1 1/2 in)	44.5 mm (1 3/4 in)
16	138 mm (5 13/32 in)	50.8 mm (2 in)	57.2 mm (2 1/4 in)
20	151 mm (5 15/16 in)	50.8 mm (2 in)	57.2 mm (2 1/4 in)
24	163 mm (6 13/32 in)	50.8 mm (2 in)	57.2 mm (2 1/4 in)
30	180 mm (7 1/16 in)	57.2 mm (2 1/4 in)	63.5 mm (2 1/2 in)
36	194 mm (7 5/8 in)	69.9 mm (2 3/4 in)	76.2 mm (3 in)
50	226 mm (8 7/8 in)	76.2 mm (3 in)	82.6 mm (3 1/4 in)

Type 30 rotochamber *(141)*

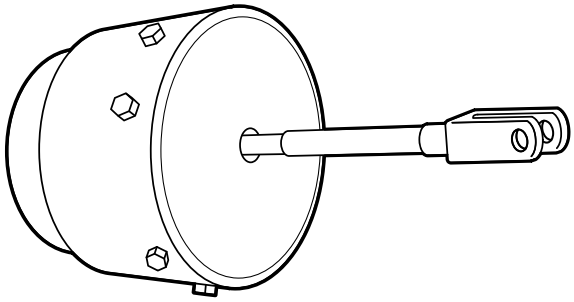

DD-3 type brake chamber

TYPE	OUTSIDE DIAMETER	MAXIMUM VALUE PROVIDED BY THE MANUFACTURER	MAXIMUM VALUE PROVIDED BY THE MANUFACTURER + 6.4 mm
30	206 mm (8 1/8 in)	57.2 mm (2 1/4 in)	63.5 mm (2 1/2 in)

Note:
This brake chamber has three pneumatic lines. It is found on motor coaches.

DD-3 brake chamber *(141)*

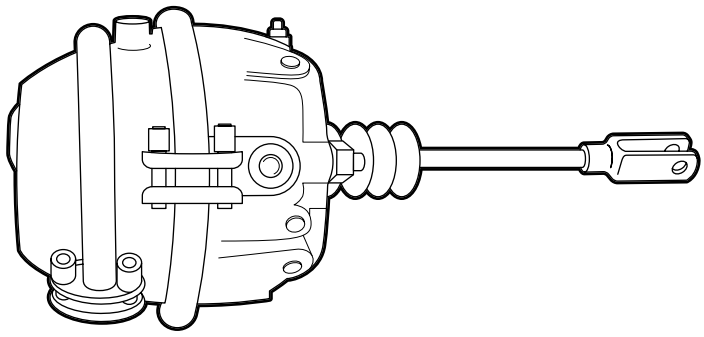

Note:
Long stroke brake chamber features are illustrated on page 91 of this guide.

c) Adjustment of wedge brakes

Using a feeler gauge, measure the displacement of the brake linings with around 620 kPa (90 psi) of air pressure applied to the brakes.

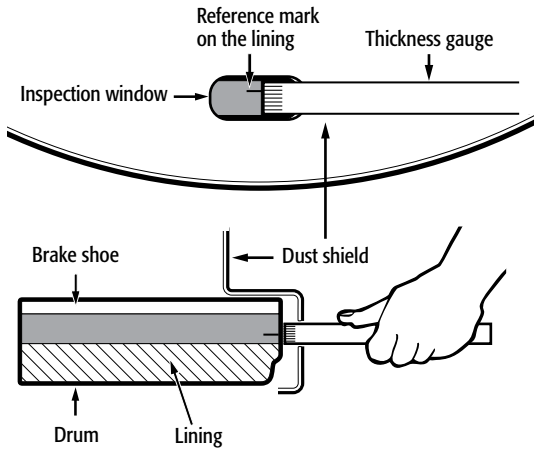

The displacement of the brake linings (125) exceeds the maximum value set by the manufacturer, which is 1.6 mm (BB**) (1/16 in) (s. 31, par. (4)).

** Indicate the measurement in the comments.

d) Brake chambers

In accordance with TMC (The Maintenance Council RP-635) recommendations, all brake chambers equipped with long stroke (LS) push rods must be identified as follows:

- The air intakes where the lines are connected to the double brake chamber are located in a square section and raised approximately ½ in.
- A trapezoidal tag (standard SAE J1817) is affixed to the chamber support clip, or the identification is engraved in the centre or on the end of the brake chamber.

Notes:

- A square push rod exit does not necessarily indicate a long stroke brake chamber.
- For the purposes of this guide:
  - **Size**
    The size of the brake chamber (e.g., 9, 12, 16, etc.).
  - **Type**
    The type of brake chamber stroke (e.g., regular/standard stroke, long stroke, etc.).

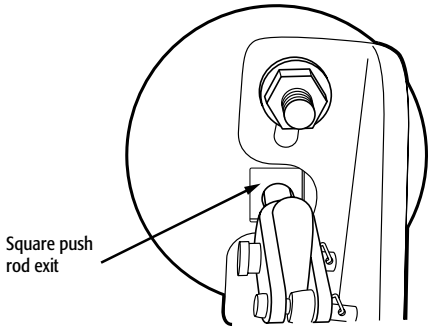

The brake chambers (141) on a single axle are of a different size (KK**) or type (KK**) (s. 38, par. (8)).

** Specify the size or type in the comments.

A brake chamber (141) is not securely fixed (CC) (s. 38, par. (8)).

A component (*) or related part (*) is missing, (A) damaged, (N) cracked, (Q) broken, (F) excessively corroded (NA**) or worn (WW**) or does not comply with the manufacturer's standards (W**) (s. 38, par (8)).

* Indicate the component code in the comments.
** Specify "in a way that hampers" in the comments.

The brake chambers (141) mounted on an active steering axle are of different sizes (KK**) (s. 166, par. (8)).

** Specify the size in the comments.

Clamp type brake chamber – single *(141)*

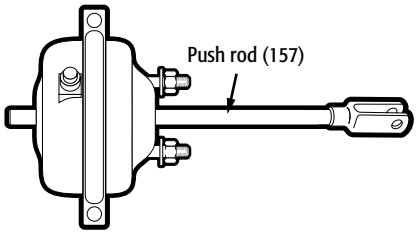

Clamp type brake chamber – dual *(141)*

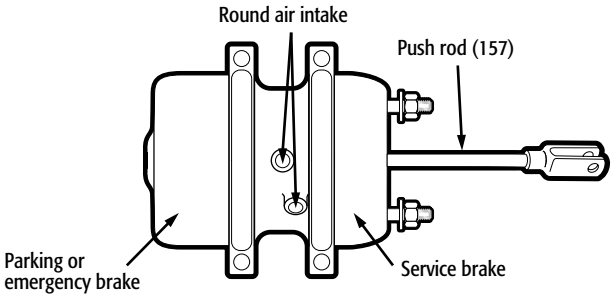

Long stroke clamp type brake chamber – single *(141)*

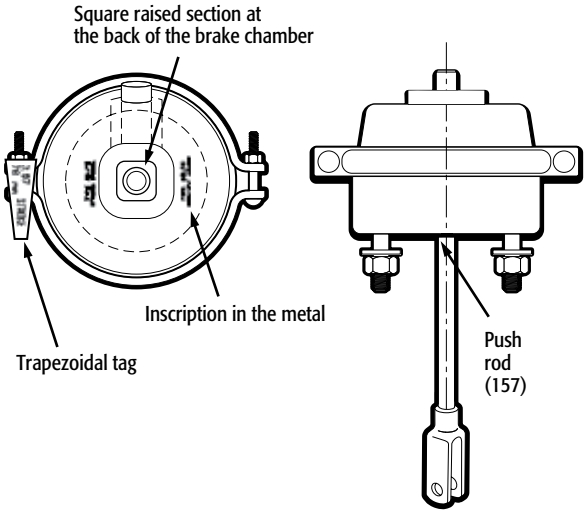

Different ways to recognize a single long stroke clamp type brake chamber

Long stroke clamp type brake chamber – dual *(141)*

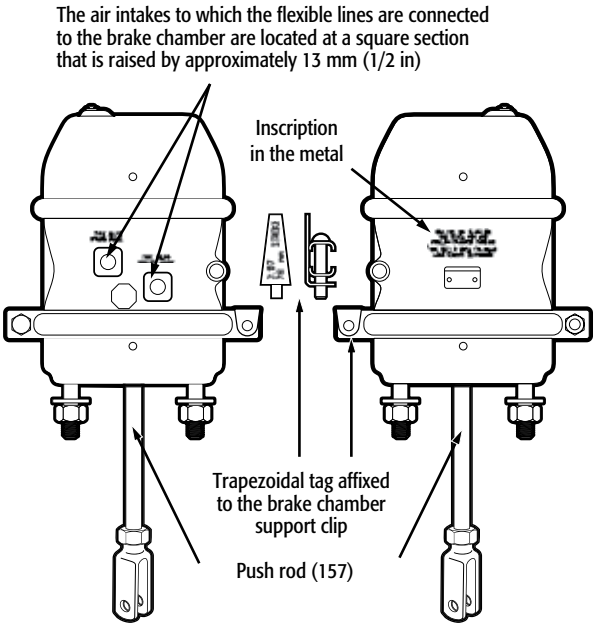

Parts and Procedures	Description of the Defect

e) Brake levers (manual or automatic)

Manual brake lever *(127)*

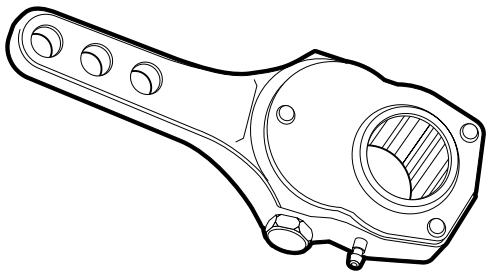

Automatic brake lever *(127)*
(or self-adjusting)

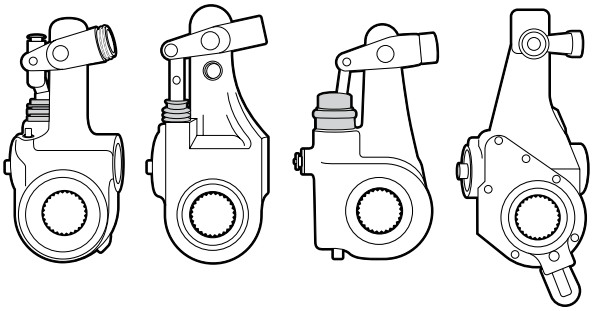

Note:
The push rod for the brake levers installed on the same axle must be at the same distance from the camshaft.

The brake levers (127) installed on a single axle are not of the same type (KK**) or size (KK**) (s. 38, par. (8)).

** Specify the size in the comments.

A brake lever (127) is corroded (NA) or so worn (WW) that the good working order is affected, not securely fixed, (CC) missing, (A) damaged (N) or deteriorated (WA) (s. 38, par. (8)).

A heavy vehicle manufactured after May 31, 1996 fitted with a pneumatic brake system is not equipped with automatic self-adjusting brake levers (127) (KK**) operating on each wheel (s. 40).

** Specify in the comments.

A semi-trailer more than 15.5 m (51 ft) in length and no more than 16.2 m (53 ft), fitted with a pneumatic brake system, is not equipped with automatic self-adjusting brake levers (127) (KK**) operating on each wheel (s. 40).

** Specify in the comments.

The brake levers (127) mounted on an active steering axle (KK**) are of different sizes (s. 166, par. (8)).

** Specify the size in the comments.

5.8 Disc brakes (ss. 31 and 164)

Hydraulic or pneumatic system

a) Discs

Check the condition of the surface of the discs through the holes as well as the internal side.

Note:
A disc shows signs of wear adversely affecting its effectiveness where, for example, it is excessively rusted or worn down.

The friction surface (124) is contaminated by oil or grease (M) (s. 31, par (10)).

The friction surface (124) shows signs of wear (N**) affecting its effectiveness (s. 30, par. (1)).

** Specify in the comments.

A crack (Q) extends to the outer edge of the friction surface of a disc (124) or on another part of the disc (do not take into account superficial surface scratches) (s. 164, par. (3)).

Parts and Procedures	Description of the Defect
b) Calipers Place the wheel so that the caliper is easily accessible and then check the fastener and the condition of the caliper from the internal side.	A caliper (122) is not securely installed, (CC) cracked, (Q) broken, (F) seized up, (U) improperly installed (MI**) or shows signs of oozing (TA) (s. 31, par. (11)). ** Specify in the comments.
c) Brake linings (pads) Perform a visual inspection. ***Note:*** Brake lining thickness must be measured at the thinnest point, excluding the bevelled part.	A riveted brake pad (125) is less than 4.8 mm (3/16 in) thick on the active steering axle or 1 mm (1/32 in) above the rivets (WW**) (s. 31, par. (2)). A riveted brake pad (125) is less than 8 mm (5/16 in) thick on a non-steering axle or 1 mm (1/32 in) above the rivets (WW**) (s. 31, par. (2)). A bonded brake lining (125) is less than 1.6 mm (WW**) (1/16 in) thick for a hydraulic brake system or less than 5 mm (3/16 in) for a pneumatic brake system (s. 31, par. (2)). A lining (125) is unbound, (QA) broken, (F) not securely attached (CC) to its shoe, contaminated by oil or grease, (M) cracked (Q**) more deeply than half of the remaining thickness or worn in an extremely uneven way (WW**) (s. 31, par. (3)). A wear indicator (125) comes in contact (WW**) with the disc (s. 31, par. (5)). * Specify in the comments. ** Indicate the measurement in the comments. A shoe (115) or a rivet (115) of the brake lining touches (AC) the friction surface of the disc when the brakes are applied (s. 164, par. (4)).
d) Working order **Inspection method:** 1. Raise the wheel off the ground and spin it; 2. Have someone gently depress the brake pedal; 3. Check the application and release of the service brake on each wheel.	When the service brakes (133) are applied, no rotation resistance can be detected on a wheel (A) (s. 34). When the brake (133) is released, the wheel does not turn freely (U) (s. 33). There is no braking or an important reduction in the braking capacity on 20% or more of the wheels or combination of wheels for a road vehicle by reason of the absence (A**) or inadequate (IN**) operation of a component of the brake system (*133) (s. 164, par. (1)). * Indicate the component code or 133. ** Specify the percentage in the comments. There is no braking (A) on a wheel of a single active steering axle equipped with brakes (133) (s. 164, par. (2)).

5.9 Drum brakes (ss. 31, 33, 34 and 164)

Hydraulic, pneumatic or electric (also known as electromagnetic) system

a) Brake linings and shoes

Perform a visual inspection without removing the dust shield or throwing the brakes out of adjustment.

Notes:

- Drum brake lining thickness must be measured at the thinnest point, excluding the bevelled part.
- A brake lining is unbound when an object with a thickness of 1 mm can be inserted at a depth of more than 10 mm between the lining and the shoe.

A bolted lining (125) is less than 8 mm (5/16 in) thick or 1 mm (1/32 in) above the fittings (W**) (s. 31, par. (2)).

** Indicate the measurement in the comments.

A riveted pad (125) is less than 4.8 mm (3/16 in) thick on the steering axle or 1 mm (1/32 in) above the rivets (W**) (s. 31, par. (2)).

** Indicate the measurement in the comments.

A riveted brake pad (125) is less than 8 mm (5/16 in) thick on a non-steering axle or 1 mm (1/32 in) above the rivets (WW**) (s. 31, par. (2)).

** Indicate the measurement in the comments.

A bonded brake lining (125) is less than 1.6 mm (WW**) (1/16 po) thick for a hydraulic or electric brake system or less than 5 mm (3/16 in) for a pneumatic brake system (s. 31, par. (2)).

** Indicate the measurement in the comments.

A lining (125) is unbound, (QA) broken, (F) not securely attached (CC) to its shoe, contaminated by oil or grease, (M) cracked (Q**) more deeply than half of the remaining thickness or worn in an extremely uneven way (WW**) (s. 31, par. (3)).

** Specify in the comments.

A shoe (115) is missing, (A) improperly installed (MI) or worn at its mounting point (WW)) (s. 31, par. (1)).

A shoe, (115) a bolt (115) or a rivet (115) of the brake lining touches (AC) the friction surface of the drum when the brakes are applied (s. 164, par. (4)).

Parts and Procedures	Description of the Defect
b) Drums Check the condition of the drums. ***Note:*** A drum shows signs of wear adversely affecting its effectiveness where, for example, it is excessively rusted, worn down or uneven.	The friction surface (123) shows signs of oil or grease contamination (MI) (s. 31, par. (9)). There is a sign of overheating (ZZ**) on a friction surface (123) (s. 31, par. (9). ** Specify in the comments. A friction surface (123) shows a sign of deterioration (N**) adversely affecting its effectiveness (s. 30, par. (1)). ** Specify in the comments. A crack (Q) extends to the outer edge of the friction surface of a drum (123) or on another part of the drum (do not take into account superficial surface scratches) (s. 164, par. (3)). ** Specify in the comments.
c) Working order **Inspection method:** 1. Lift the wheel off the ground and spin it; 2. Have someone gently depress the brake pedal; 3. Check the application and release of the service brake on each wheel.	When the service brakes (133) are applied, no rotation resistance can be detected on a wheel (A) (s. 34). When the brake (133) is released, the wheel does not turn freely (U) (s. 33). There is no braking or an important reduction in the braking capacity on 20% or more of the wheels or combination of wheels for a road vehicle by reason of the absence (A**) or inadequate (IN**) operation of a component of the brake system (*133) (s. 164, par. (1)). * Indicate the component code or 133. ** Specify the percentage in the comments. There is no braking (A) on a wheel of a single active steering axle equipped with brakes (133) (s. 164, par. (2)).

5.10 Component and defect codes for the brakes

COMPONENTS	DEFECTS
5 – Indicator lamp	A – Absent/Missing/Not equipped
21 – Electric cable	B – Weakened
25 – Plug/Connector/Adaptor/Electrical outlet	D – Broken
115 – Segment/Rivet/Bolt (brake lining)	F – Broken
116 – Master cylinder	G – Cut/Torn/Abraded/Scraped
117 – Power brake	L – Maladjusted
118 – Line (brake)	M – Clogged/Contaminated
119 – Filter (brake)	N – Damaged
120 – Reservoir	Q – Cracked/Grooved
121 – Wheel cylinder/Piston	R – Does not work properly
122 – Caliper (brake)	T – Leak
123 – Drum	U – Seized up/Stuck
124 – Disc	V – Ineffective/Inoperative
125 – Brake lining	W – Does not comply with manufacturer's standards
126 – Camshaft	X – Does not comply with regulatory standards
127 – Brake lever	Z – Abnormal play
128 – Compressor	AC – Touches/Allows to come in contact with
129 – Compressor pulley	AE – Risk of rupture/Separation
130 – Brake pedal	AF – Causes interference
131 – Glad hand	AG – Exposes the cord or carcass
132 – Brake fluid	BB – Improperly adjusted
133 – Service brake	CC – Not securely mounted
134 – Emergency brake/Hydraulic locking service brake	EE – Improperly tightened/Loose
135 – Parking brake	GG – Does not work
136 – Brake controls	HH – Does not come on
137 – Belt (brakes)	IN – Inadequate
138 – Pressure gauge	JJ – Oil level too low
139 – Electric pump/Vacuum	KK – Inappropriate
140 – Warning buzzer/Visual device (brakes)	LA – Crimped/Crushed
141 – Brake chamber	LB – Twisted
142 – Tractor truck protection valve	MA – Misaligned
143 – Fitting (brake)	MI – Improperly installed/Improperly assembled
144 – Valve	NA – Corroded
145 – ABS brake system	QA – Unbound/Separated
146 – Electromagnet	QQ – Bulged
147 – Drain tap	RR – Welded
148 – Pressure regulator	TA – Oozing
149 – Fastener (brake)	TT – Insufficient tension
157 – Stroke of the push rod	WA – Damaged/Deteriorated
158 – Cable (parking brake)	WW – Worn
	ZZ – Other (specify)

Fuel and Engine Control Systems

Section 6

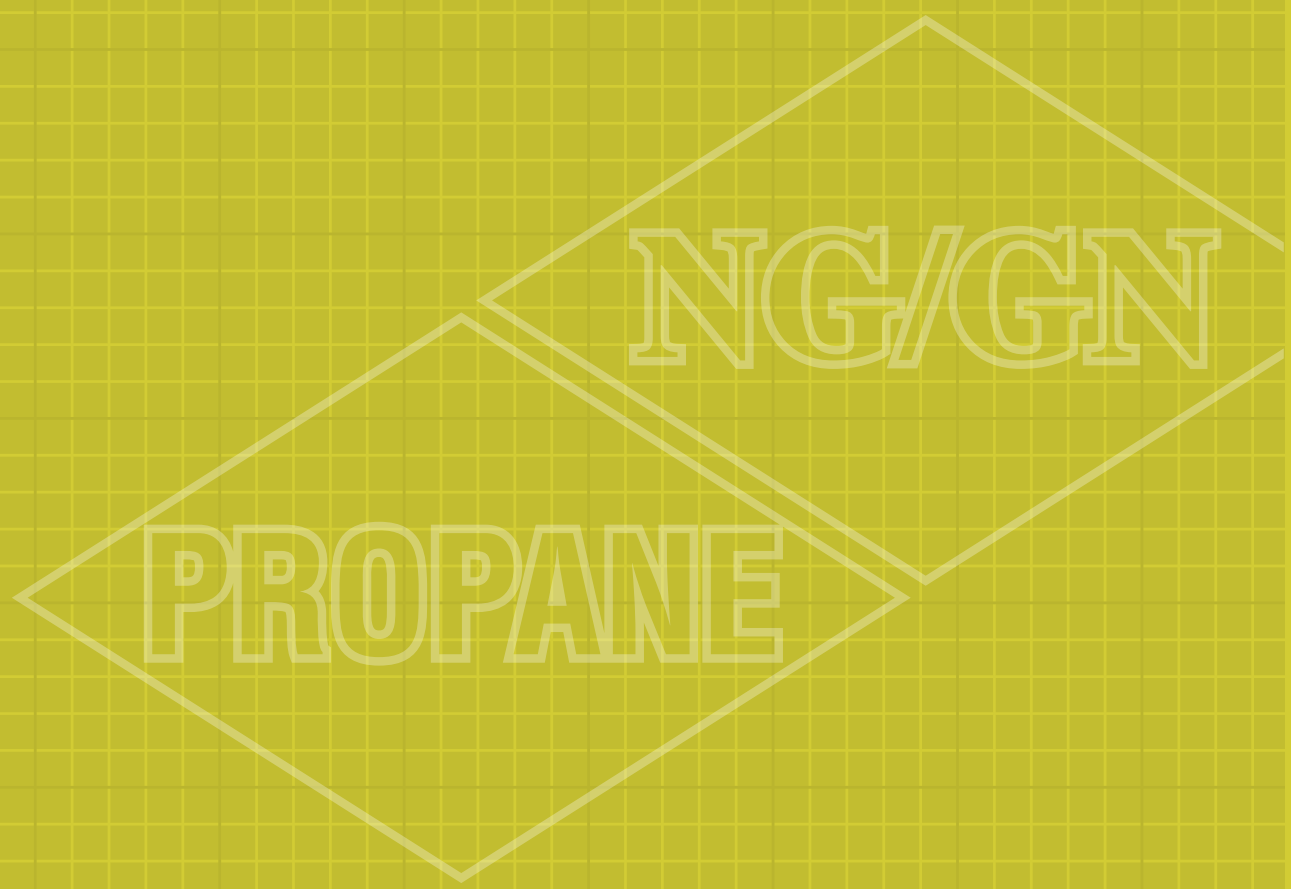

Fuel and Engine Control Systems

Parts and Procedures	Description of the Defect

6.1 Fuel system (ss. 74, 81, 85, 87 and 171)

Visually inspect the following components:

General Provisions

There is oozing (TA) of fuel along the fuel supply system (* or 295) (s. 81, par. (1)).

* Specify the component code. If there is no code, indicate 295.

There is a fuel leak (T) other than oozing along the fuel system (* or 295) (s. 171, par. (2)).

* Specify the component code. If there is no code, indicate 295.

a) Fuel tank for gasoline, diesel, propane or natural gas engines

The filler hose (291) shows oozing (TA) or is not securely mounted (CC) (s. 81, par. (1) and par. (4)).

The fuel tank (292) shows oozing, (TA) is cracked (Q) or is not securely mounted (CC) (s. 81, par. (2)).

A retaining or protection strap (294*) of the fuel tank is missing, (A) cracked, (Q) broken, (F) not securely mounted (CC) or does not comply with the manufacturer's standards (W**) (s. 81, par. (3)).

A fuel tank support (294*) is missing, (A) cracked, (Q) broken (F) or not securely mounted (CC) (s. 81, par. (3)).

The gas or diesel tank is not fitted with a cap (293) designed (X**) for that tank or that can prevent a spill (W**) (s. 81, par. (5)).

* Specify which component in the comments.
** Specify in the comments.

The fuel tank (292) shows a leak (T) other than oozing (s. 171, par. (3)).

The fuel tank (292) is not securely fixed and there is a risk of separation (AE) (s. 171, par. (3)).

The gasoline or diesel fuel tank does not have (A) a filler cap (293) (s. 171, par. (3)).

Parts and Procedures	Description of the Defect
b) Lines and fittings ***Notes:*** • For the required clearance between a fuel line and a component of the exhaust system, see Section 7 on the installation of exhaust system components. • A line or fitting is inadequate where it is not of the type that is appropriate to the purpose for which it is used.	A line (291) is so cracked that the cord is exposed, (AG) is cut, (G) crushed, (LA) crimped, (LA) corroded (NA) or excessively worn, (WW) or not securely mounted (CC) in a way that allows it to rub against adjacent parts (AC) (s. 81, par. (4)). A line (291) or fitting (298) is inadequate (IN) (s. 81, par. (4)).
c) Fuel gauge	The fuel gauge (296) is missing (A) or does not work (GG) (s. 81, par. (6)). The fuel gauge (296) is not visible from the driver's seat (DD**) (except in LPG systems) (s. 81, par. (6)). ** Specify in the comments.
d) Sticker ***Notes:*** • The Société de l'assurance automobile du Québec is not the body that is responsible for issuing propane or natural gas supply system compliance stickers. • Holders of a certificate of qualification in gas carburetion techniques (TCG) who perform an installation or who inspect vehicles that run on propane or natural gas must provide the sticker. • New vehicles that run on propane or natural gas are not required to bear a sticker until their first regulatory inspection (3 years for natural gas, 5 years for propane). • The sticker (propane and natural gas) must be affixed inside the rear window or the rear side window of the vehicle, near the filler cap so that the sticker may be seen by the person filling the tank.	The sticker (297) is non-compliant, (X) missing, (A), incorrectly located (DD) or not valid (X) (ss. 85, 86, 87 and 88).

Propane

- Here is an example of the sticker used for propane systems:

Date d'expiration

Mois	Année
1	2020
2	2021
3	2022
4	2023
5	2024
6	2025
7	2026
8	2027
9	2028
10	2029
11	2030
12	2031

PROPANE

Québec

Numéro de certificat de l'installateur ou de l'inspecteur

- Installers and inspectors produce stickers based on this example or obtain stickers from the Association québécoise du propane by calling 450-776-2177.
- The list of certified mechanics who are members of the Association québécoise du propane is available from the Association.

Natural gas

- Here is an example of the sticker used for natural gas systems:

Date d'expiration

Mois	Année
1	2018
2	2019
3	2020
4	2021
5	2022
6	2023
7	2024
8	2025
9	2026
10	2027
11	2028
12	2029

NG/GN

Québec

Numéro de certificat de l'installateur ou de l'inspecteur

- Installers and inspectors produce stickers based on this example.

6.2 Engine control system (ss. 96 and 171)

The engine control system should be inspected when the vehicle is stationary (parking brake engaged), with the engine running and the transmission in the neutral position. Gently press and the gradually release the accelerator pedal to make sure the engine returns to idle.

Inspect the following components:

General Provisions

The engine does not accelerate (R**) or does not quickly return to idle (R**) when the accelerator pedal (299) is depressed or released (s. 96, par. (1)).

** Specify in the comments.

The mechanism (299) for controlling the engine that works with air shows a leak (T) (s. 96, par. (2)).

The engine does not return to idle (R**) when the accelerator is released (299) (s. 171, par. (1)).

** Specify in the comments.

a) Accelerator pedal

The accelerator pedal (299) is missing (A) or not securely mounted (CC) (s. 96, par. (1)).

b) Accelerator linkage and return springs

Inspect the condition of the accelerator linkage and return springs. With the engine turned off, fully depress the accelerator to make sure movement is free and that it returns to its initial position when released.

The accelerator linkage (299*) is worn, (WW), seized up (U) or not securely mounted (CC) in a way that prevents the pedal from working properly (s. 96, par. (1)).

* Specify which component in the comments.

A return spring (299*) is missing, (A) worn (WW) or inadequate (IN) (s. 96, par. (1)).

* Specify which component in the comments.

c) Shutdown system for diesel engines

Activate the shutdown system while the engine is idling.

The engine does not shut down (GG) when it is idling and the shutdown system is activated (290) (s. 96, par. (1)).

6.3 Component and defect codes for the fuel and engine control systems

COMPONENTS	DEFECTS
290 – Shutdown system (engine)	A – Absent/Missing/Not equipped
291 – Line (fuel)	F – Broken
292 – Fuel tank	Q – Cracked/Grooved
293 – Filler cap	R – Does not work properly
294 – Fastener (fuel)	T – Leak
295 – Fuel supply system	W – Does not comply with manufacturer's standards
296 – Gauge (fuel)	X – Does not comply with regulatory standards
297 – Sticker (CNG/LPG)	AC – Touches/Allows to come in contact with
298 – Fitting (fuel)	AE – Risk of rupture/Separation
299 – Accelerator pedal	AG – Exposes the cord or carcass
	CC – Not securely mounted
	DD – Improperly located
	GG – Does not work
	IN – Inadequate
	LA – Crimped/Crushed
	NA – Corroded
	TA – Oozing
	WW – Worn

Section 7

Exhaust System

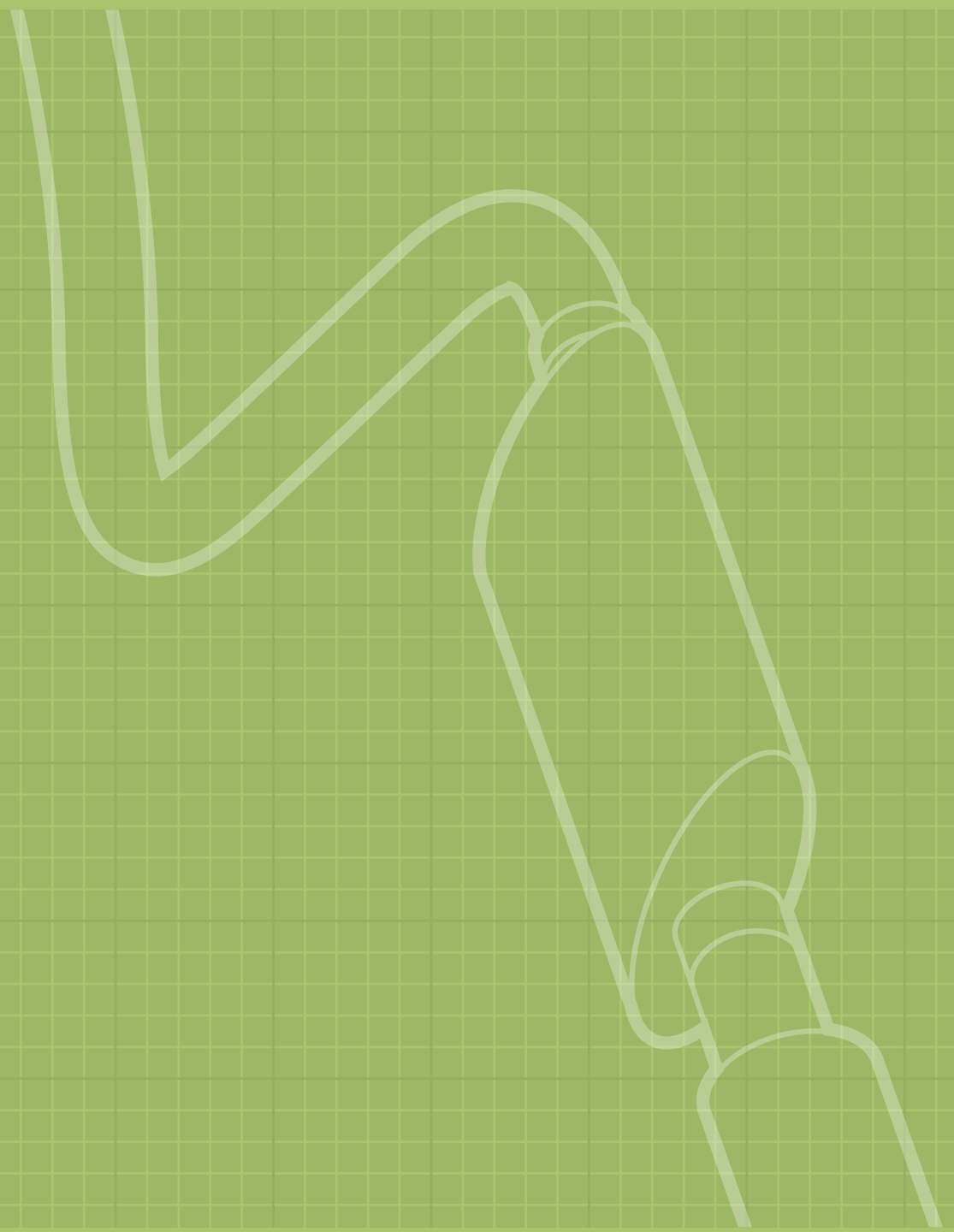

Exhaust System

Parts and Procedures	Description of the Defect

7.1 Exhaust system (ss. 39, 91, 92, 95 and 171)

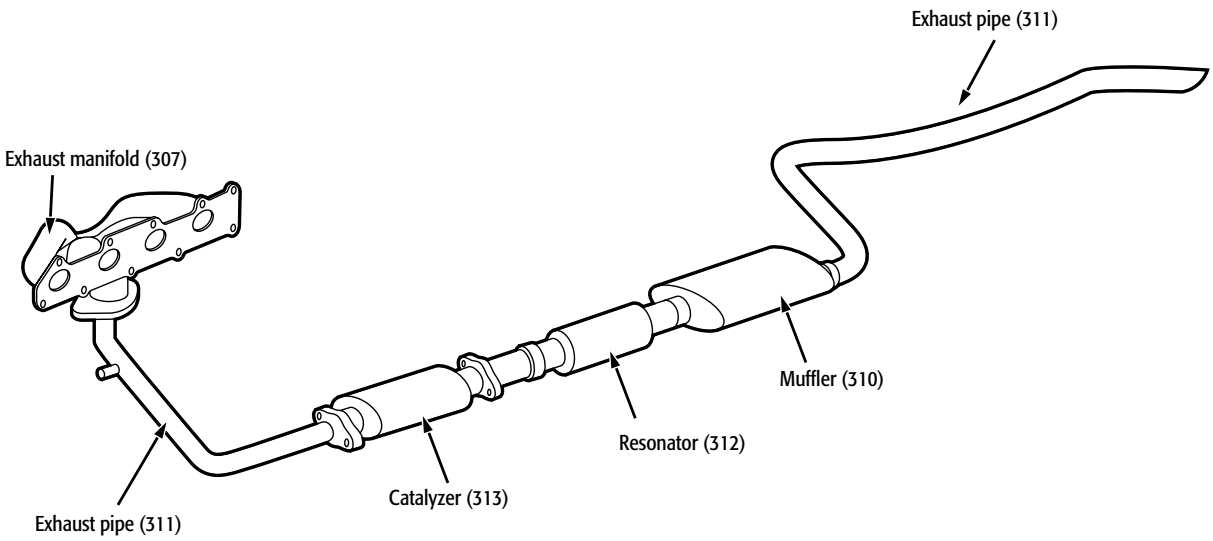

With the engine running, check the exhaust system and pay special attention to gas leaks. If the inspection is being performed indoors, make sure the area is properly ventilated.

Notes:

- Disregard holes made by the manufacturer to release condensation.
- Installing a replacement (jobber) exhaust system is acceptable if the system is complete.

General Provisions

A component of the exhaust system (*or 306) intended by the manufacturer is missing, (A) not securely mounted (CC) to its anchorages or has a leakage of gas (T) (s. 91).

Flammable material is leaking (ZZ**) on a component of the exhaust system (*or 306) (s. 92).

* Indicate which component in the comments.
** Specify in the comments.

There is leakage (T**) of exhaust gases (306) from the engine:
- under the passenger compartment where the floor is perforated; or
- in the engine compartment (s. 171, par. (4)).

** Specify the location in the comments.

Parts and Procedures	Description of the Defect
a) Muffler, catalyzer and resonator ***Notes:*** • Disregard holes made by the manufacturer to release condensation. • A repair is inadequate where the component does not preserve the original characteristics that were present when it was manufactured. • The anti-pollution system dissipates a large amount of heat, which increases the risk of burns.	The muffler, (310) the catalyzer (313) or the resonator (312) is missing (A) or not securely mounted (CC) (s. 91). The muffler, (310) the catalyzer (313) or the resonator (312) is leaking (T) gas (s. 91). The muffler, (310) the catalyzer (313) or the resonator (312) has undergone an inadequate repair (FF**) (s. 91). ** Specify in the comments.
b) Exhaust pipes ***Notes:*** • Disregard holes made by the manufacturer to release condensation. • A repair is inadequate where the component does not preserve the original characteristics that were present when it was manufactured. • The heat shield lets fresh air mix with the hot exhaust gases, thereby cooling the gases coming out of the exhaust pipe. The gap between the exhaust pipe and the heat shield must therefore not be considered a leak. ***Heat shield*** 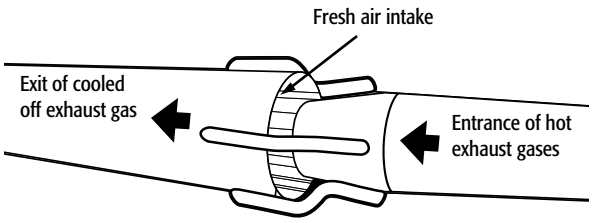 	A pipe (311) is leaking (T) gas (s. 91). A pipe (311) has undergone an inadequate repair (FF**) (s. 91). ** Specify in the comments. A pipe (311) crosses the passenger compartment (DD**) (s. 95). ** Specify in the comments. The outlet of the vehicle's exhaust pipe (311) is located under the space occupied by the passengers and luggage or under the emergency door (DD**) (s. 95). ** Specify the location in the comments. For a school bus, the outlet of the exhaust pipe (311) is under or in front of an openable side window (DD**) (s. 95). ** Specify the location in the comments. The tip of the exhaust pipe (311) extends more than 15 cm (6 in) horizontally (X**) from the road vehicle (s. 95). ** Specify the location and measurement in the comments. There is a leakage (T) of gas from a joint (307) (s. 91). A pipe (311) is missing (A) or not securely mounted (CC) (s. 91).
c) Brackets and fasteners	A fastener (308) is missing (A) or not securely mounted (CC) (s. 91).

d) Heat shield

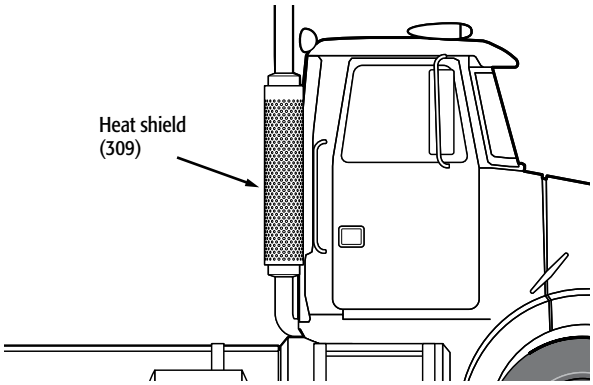

Note:

A heat shield is required where a component of the exhaust system is located near a cab door and persons using the door risk being burned.

The heat shield (309) is missing (A) or not securely mounted (CC) (s. 93).

e) Installation

A component of the exhaust system, (*) other than the components used for the regeneration of the particle filter of the exhaust system, runs closer than 50 mm (2 in) (X**) from another element, such as a part made of combustible materials, an electric wire, the fuel supply system or the brake system (s. 92).

* Indicate which component in the comments.
** Specify the location and measurement in the comments.

A component of the exhaust system (*) runs closer than 25 mm (1 in) (X**) from a diesel tank protected by an appropriate heat shield (s. 92).

A component of the exhaust system (*) runs closer than 150 mm (6 in) (X**) from a pressurized fuel line of the CNG or LPG types (s. 92).

* Indicate which component in the comments.
** Specify the location and measurement in the comments.

7.2 Component and defect codes for the exhaust system

COMPONENTS	DEFECTS
306 – Exhaust system	A – Absent/Missing/Not equipped
307 – Manifold/Joint	T – Leak
308 – Fastener (exhaust)	X – Does not comply with regulatory standards
309 – Heat shield	AE – Risk of rupture/Separation
310 – Muffler	CC – Not securely mounted
311 – Exhaust pipe	DD – Improperly located
312 – Resonator	FF – Modified/Poorly repaired
313 – Catalyzer	ZZ – Other (specify)

Section 8

Windows and Rearview Mirrors

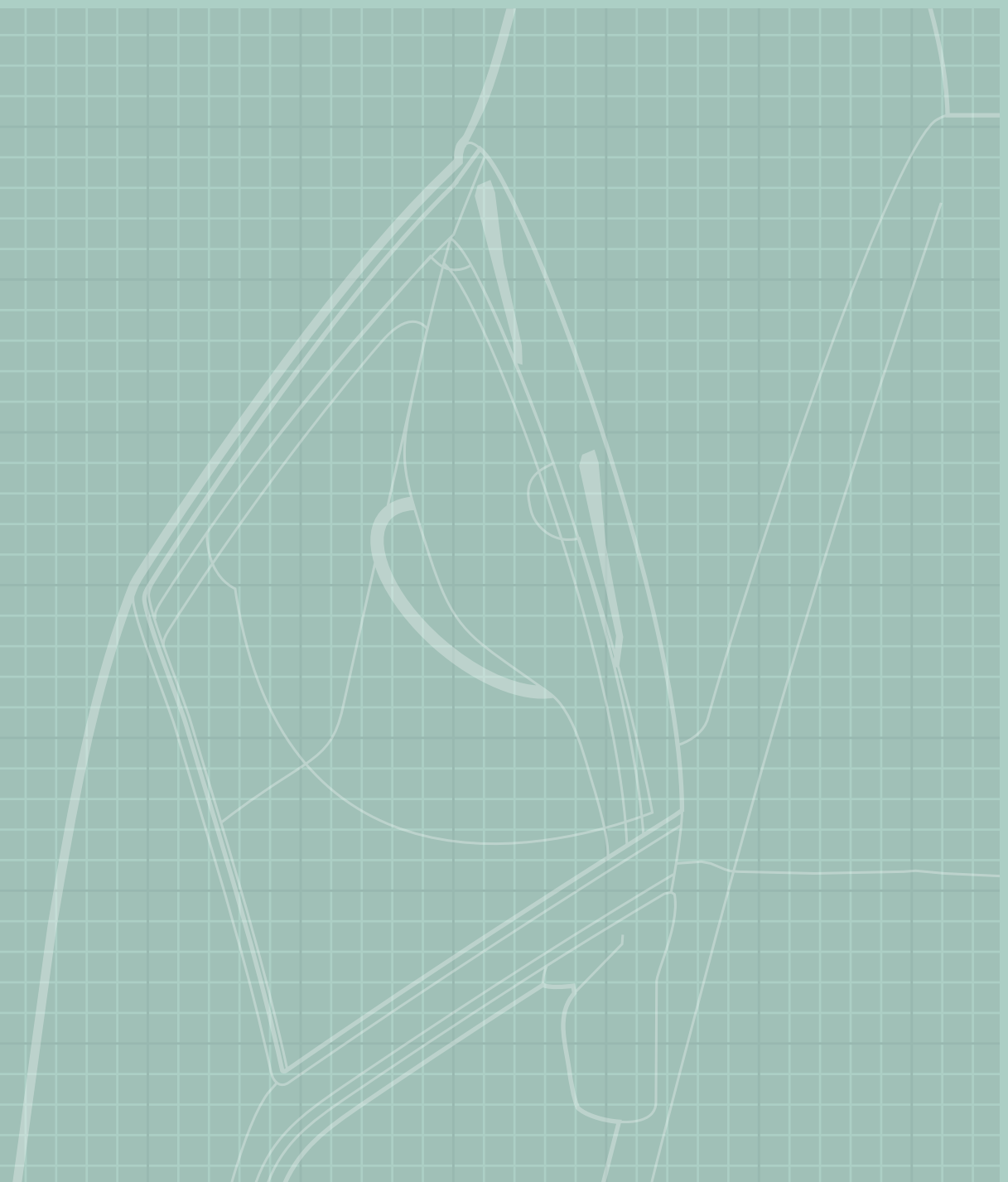

Parts and Procedures	Description of the Defect

8.1 Windows (ss. 58, 59, 60, 61, 62, 63, 64, 65 and 163, par. (7))

Visually inspect the following components:

Note:

A windshield or window that only has a European code may be acceptable on condition that the code is appropriate. If in doubt, please contact the Direction générale de l'expertise légale et de la sécurité des véhicules.

General Provisions

! The windshield (256) or a window (259, 260) is not made of safety glass and does not bear the appropriate information, (X**) i.e. AS 1 in the case of a windshield and AS 2 in the case of other windows (see Appendix 3 for exceptions) (s. 58). (Does not apply to military-type road vehicles. Refer to Appendix 4 for the defect.)

! A window (256, 259, 260) is missing, (A) incorrectly fixed (CC) or has a sharp edge (C) (s. 58).

! Mirror-like material has been affixed or sprayed on (SS**) a window (256, 259, 260) of the vehicle (s. 63).

** Specify in the comments.

a) Windshield

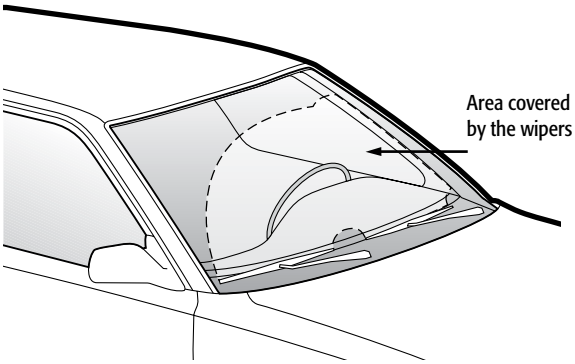

! The windshield (256) is missing (A) (s. 58).

! The windshield (256) is tarnished, (E**) cloudy (E**) or broken (D**) in a way that reduces the driver's vision of the road or road signs (s. 59).

** Specify "in a way that reduces the driver's vision" in the comments.

! An object or sticker (256) that reduces the driver's vision of the road or road signs (LL**) is hung or affixed to the windshield (s. 59).

** Specify in the comments.

! The windshield (256) has an intersection of cracks (Q**) or missing flakes (LC**) more than 12 mm (1/2 in) in diameter that meet on the area covered by the wipers, excluding the area under the inside mirror and a strip of 75 mm (3 in) in the upper and lower parts of the windshield (s. 60).

** Indicate the measurement in the comments.

! There is a loss of transparency (E**) in the area of the windshield (256) covered by the wipers or that exceeds 10% of the total surface of the windshield (s. 61).

** Specify "exceeds 10%" in the comments.

Parts and Procedures	Description of the Defect
	A darkening or opaque material (SS**) has been affixed or sprayed on the windshield (256) (a strip of no more than 150 mm (6 in) in width is permitted in the upper part of the windshield) (s. 64). ** Specify in the comments.
	The windshield (256) is so damaged (N**) that the driver's vision of the road and road signs is considerably reduced (s. 163, par. (7)). ** Specify in the comments.
b) Side windows and rear window ***Note:*** The rear window may be tarnished, cloudy or blocked if the vehicle is equipped with a side mirror on the right (passenger) side.	A side window (259) on either side of the driver's compartment is tarnished, (E**) fogged (E**) or obstructed (LL**) in a way that reduces the driver's vision of the road or road signs, is crazed (H) or cracked (Q) (s. 62). ** Specify "in a way that reduces the driver's vision" in the comments.
	The side window (259) on the left side of the driver's compartment cannot be easily opened (GG) to allow the driver to signal his or her manoeuvres with his or her arm (s. 65).
	The rear window (260) is tarnished, (E**) fogged (E**) or obstructed in a way that reduces the driver's vision of the road or road signs, (LL**) is crazed (H) or cracked (Q) (s. 62). ** Specify "in a way that reduces the driver's vision" in the comments.
	School bus A side window (259) immediately behind the driver's compartment is tarnished, (E**) fogged (E**) or obstructed (LL**) in a way that reduces the driver's vision of the road or road signs, is crazed (H) or cracked (Q) (s. 62). ** Specify "in a way that reduces the driver's vision" in the comments.
	School bus with a gross vehicle weight rating (GVWR) of more than 4,536 kg (10,000 lb) One of the first two windows (259) on either side of the school bus is not double glazed and hermetically sealed (X**) (s. 62.1). ** Specify in the comments.

Section 8

8.2 Rearview mirrors (ss. 66 and 67)

Make sure the rearview mirrors are present and check their condition.

Make sure they are solidly attached and check the adjustment mechanism.

Notes:

- All motor vehicles must be equipped with at least two rearview mirrors: one inside mirror at the centre of the upper part of the windshield and an outside mirror on the left side of the vehicle. When the inside mirror cannot be used, another mirror must be attached to the right side of the vehicle.
- School buses must be equipped with at least one convex rearview mirror attached to the outside front of the bus. Buses built after July 1, 1997 must have at least one convex mirror on each side.

A rearview mirror (257, 258) is not securely fixed (CC) (s. 66).

A rearview mirror (257, 258) shows a sharp edge (C) (s. 66).

A rearview mirror (257, 258) is broken, (F) cracked (Q) or tarnished (E) (s. 66).

The silvering of a required rearview mirror is unbound (QA**) (except on the periphery of the reflecting surface without exceeding 10% of the total surface) (s. 66).

A required rearview mirror (257, 258) is missing, (A) inadequate, (IN) is not adjustable (R) or does not remain steady where positioned (ss. 66 and 67).

8.3 Component and defect codes for the windows and rearview mirrors

COMPONENTS	DEFECTS
256 – Windshield	A – Absent/Missing/Not equipped
257 – Inside rearview mirror	C – Sharp edge/Protrusion
258 – Outside rearview mirror	D – Broken
259 – Side window	E – Cloudy/Tarnished
260 – Rear window	F – Broken
	H – Crazed
	Q – Cracked/Grooved
	N – Damaged
	R – Does not work properly
	X – Does not comply with regulatory standards
	AE – Risk of rupture/Separation
	CC – Not securely mounted
	GG – Does not work
	LC – Missing flakes
	IN – Inadequate
	LL – Blocked
	QA – Unbound/Separated
	SS – Tinted

Accessories

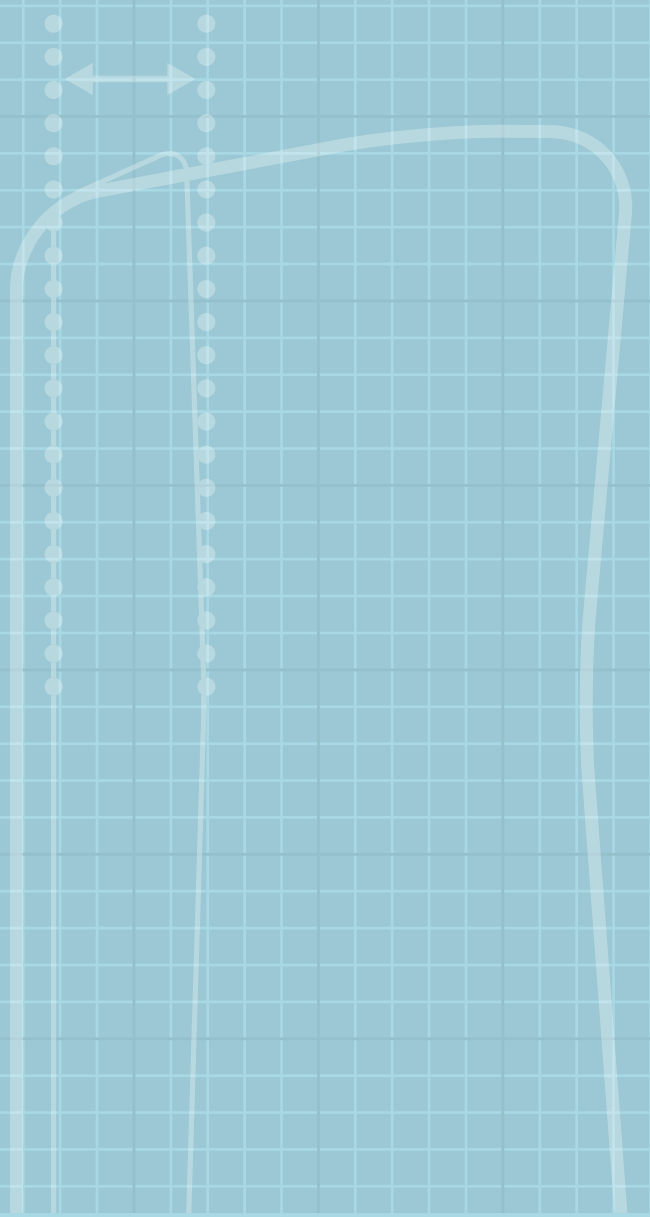

Parts and Procedures	Description of the Defect

9.1 Sun visor (s. 68)

Make sure the sun visor on the driver's side is present, effective and not damaged.

Outside sun visor

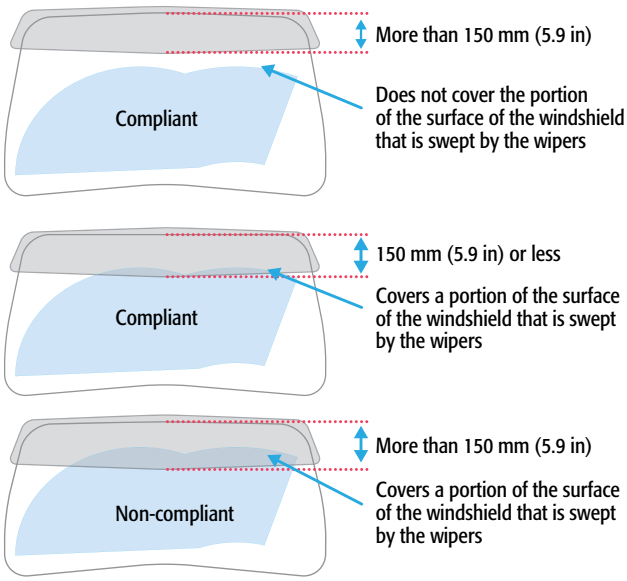

Measuring the area covered by an outside sun visor

1. Find the lowest point to which the sun visor extends over the area swept by the wipers.
2. Imagine a horizontal line that extends from the lowest point of the sun visor determined in Step 1 to the windshield.
3. Measure the distance between the point on the windshield determined in Step 2 and the top edge of the windshield. If this distance is greater than 150 mm, the outside sun visor is non-compliant.

Notes:

- The "area swept" corresponds to the area of the windshield that is swept by the original wiper blade attached to the original wiper arm.
- With regard to the sun visor, additional requirements apply to military-type road vehicles. (Refer to Appendix 4.)

The sun visor (327) on the driver's side is missing (A) (s. 68).

The sun visor (327) on the driver's side is not in proper working order, (R) that is, it does not remain steady where positioned (s. 68).

On the windshield, the outside sun visor (255) extends lower than 150 mm below the top edge of the windshield and covers a section of the surface of the windshield that is swept by the wipers (X**) (s. 68).

** Indicate the measurement in the comments.

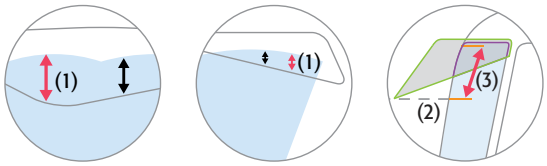

9.2 Horn (s. 69)

Make sure the horn is solidly attached and working properly, and that its control is easy to reach. The horn may be electric or air powered.

Note:

A horn is inadequate if it does not work or if it is inaudible at a distance of approximately 60 m (200 ft).

The horn (321) is not securely mounted (CC) (s. 69).

The control (19*) is not easy to reach, (DD) poorly identified (IN**) or not securely mounted (CC) (s. 69).

The horn (321) is inadequate (IN**) (s. 69).

* Specify which control in the comments.
** Specify in the comments.

9.3 Windshield wipers and washer system (ss. 70 and 163)

Inspect the windshield wipers to make sure they work properly and are not damaged by placing the function lever in each of the operating positions after activating the washer lever and making sure the wipers will not damage the vehicle.

Notes:

- An inadequate windshield washer system is a system that does not work.
- An inadequate windshield wiper on the driver's side is a wiper that does not work or does not clean the windshield effectively.

The windshield washer system (332) is inadequate (IN**) or the washer fluid spray is improperly adjusted (BB) or inadequate (IN**) (s. 70).

** Specify in the comments.

A wiper blade (319) is missing, (A) worn, (WW**) improperly adjusted (BB**) or damaged (N**) in a way that renders it ineffective (s. 70).

** Specify "in a way that renders it ineffective" in the comments.

A wiper blade (319) does not make even contact (V) with the windshield (s. 70).

The wiper blades (319) do not sweep the area specified by the manufacturer (W**) (s. 70).

** Specify in the comments.

The windshield wipers (331) sweep at a frequency of less than 20 strokes per minute at low speed or less than 45 strokes per minute at top speed (X**) (s. 70).

** Specify the number of strokes in the comments.

The difference between both speeds of the windshield wipers (331) is less than 15 strokes per minute (X**) (s. 70).

** Specify the number of strokes in the comments.

The windshield wiper (319*, 331*) on the driver's side is missing (A) or inadequate (IN, GG) (s. 163, par. (8)).

* Specify "driver's side" in the comments.

9.4 Heater and defroster (s. 71)

Check each of the functions of the heater and defroster system, and check the temperature and circulation of air at each of the defroster outlets provided by the manufacturer. An auxiliary fan may be used.

Notes:

- If part of the heating liquid piping is visible from inside the vehicle, check to make sure it is not damaged.
- A system is inadequate if does not produce any heat.

The blower (323) does not work (GG**) (s. 71, par. (1)).

The amount of air blown (323) onto the windshield where intended by the manufacturer or onto the side windows (if the vehicle has vents for that purpose) is insufficient (V) or the system is inadequate (IN**) (s. 71, par. (1) and par. (2)). (Specific requirements apply to military-type road vehicles. Refer to Appendix 4.)

** Specify in the comments.

Heating liquid piping (323*) that runs inside the passenger compartment is cut, (G) cracked, (Q) worn (WW) or leaks (T) (s. 71, par. (3)).

* Specify which piping in the comments.

9.5 Neutral safety switch (s. 72)

Perform this inspection with the brake pedal depressed.

With the engine turned off, try to start the engine with the automatic transmission lever in any position other than P or N. For vehicles with manual (standard) transmissions, try to start the engine while the clutch pedal is not depressed to the floor.

Note:

Only applies to vehicles originally equipped with a neutral safety switch.

Automatic transmission: the starter (330) is activated where the transmission lever is in a position other than P or N (GG) (s. 72).

Manual transmission: the starter (330) is activated where the clutch pedal is not depressed to the floor (GG) (s. 72).

9.6 Speedometer and odometer (s. 73)

Check these accessories only if you have reason to believe they are defective, in which case a road test may be required.

Notes:

- The dashboard odometer is not required where the vehicle is equipped with a working hub meter.
- An electronic device equipped with a GPS system cannot be used to replace the dashboard speedometer or odometer if any of the latter's components do not work.

The speedometer (326) or the odometer (325) does not work (GG) (s. 73).

9.7 Indicator lights and gauges in school buses (s. 74)

If part of the original equipment, check the following indicators and gauges to make sure they are present and work properly:

- The engine coolant temperature gauge
- The engine oil pressure gauge
- The voltmeter
- The fuel gauge
- The vacuum or air pressure gauge of the brake system

An indicator (336*) is missing (A) or does not work (GG) (s. 74).

* Specify which indicator in the comments.

9.8 Retractable stop sign on school buses (s. 75)

Activate the stop sign to make sure it extends and retracts and remains in the desired position.

Note:

In certain vehicles, the engine may have to be running in order to perform this inspection.

The stop sign (337) does not extend or retract when activated (GG) (s. 75).

The stop sign (337) does not remain in the desired position (R) (s. 75).

9.9 Clutch control (s. 97)

To inspect the clutch control, put the gearshift lever in "N" (Neutral), fully engage the clutch, start the engine and try to shift into a gear.

Note:

The clutch control should preferably be checked in a clear outdoor area and with the parking brake engaged.

The clutch pedal (329) is not of a non-slip type (X**) (s. 97, par. (1)).

** Specify in the comments.

A component (329*) of the clutch system is worn (WW**) in a way that prevents it from working properly or is missing (A) (s. 97, par. (2)).

* Specify which component in the comments.
** Specify "in a way that prevents" in the comments.

The clutch (329) does not interrupt (GG) the transmission of engine torque to the gearbox shaft (s. 97, par. (4)).

9.10 First-aid kit (s. 78)

Check to make sure this equipment is securely attached and easy to reach.

Note:

A first aid kit is required under:

- The *Regulation respecting road vehicles used for the transportation of school children*;
- The *Regulation respecting road vehicles adapted for the transportation of handicapped persons*.

The first-aid kit (338) is not securely attached (CC) or is difficult to reach (DD) (s. 78).

9.11 Chemical extinguisher (s. 79)

Check to make sure this equipment is securely attached, easy to reach and in good condition.

Notes:

- A chemical extinguisher is required under:
  - The *Transportation of Dangerous Substances Regulation*;
  - The *Regulation respecting road vehicles used for the transportation of school children*;
  - The *Regulation respecting road vehicles adapted for the transportation of handicapped persons*.
- An extinguisher is inadequate where it is not equipped with a pressure gauge or the gauge indicates "refill" or "zero".

The extinguisher (339) is not securely attached, (CC) difficult to reach (DD) or inadequate (IN**) (s. 79).

** Specify in the comments.

9.12 Crossing control arm on school buses (s. 76)

Make sure the arm is working properly.

The crossing control arm (318) does not extend at a right angle (X**) to the bus (s. 76, par. (2)).

The crossing control arm (318) does not fully extend in two to four seconds (X**) (s. 76, par. (2)).

** Specify in the comments.

The crossing control arm (318) has a pointed or sharp edge (C) (s. 76, par. (3)).

9.13 Component and defect codes for the accessories

COMPONENTS	DEFECTS
19 – Switch	A – Absent/Missing/Not equipped
255 – Outside sun visor	G – Cut/Torn/Abraded/Scraped
318 – Crossing control arm	N – Damaged
319 – Wiper blade	R – Does not work properly
321 – Horn	T – Leak
323 – Heater/Defroster	V – Ineffective/Inoperative
325 – Odometer	W – Does not comply with manufacturer's standards
326 – Speedometer	X – Does not comply with regulatory standards
327 – Inside sun visor	AE – Risk of rupture/Separation
329 – Clutch control	BB – Improperly adjusted
330 – Neutral safety switch	CC – Not securely mounted
331 – Windshield wiper	DD – Improperly located
332 – Windshield washer	GG – Does not work
336 – Gauge	IN – Inadequate
337 – Retractable stop sign	WW – Worn
338 – First aid kit	
339 – Chemical extinguisher	

Section 10

Tires and Wheels

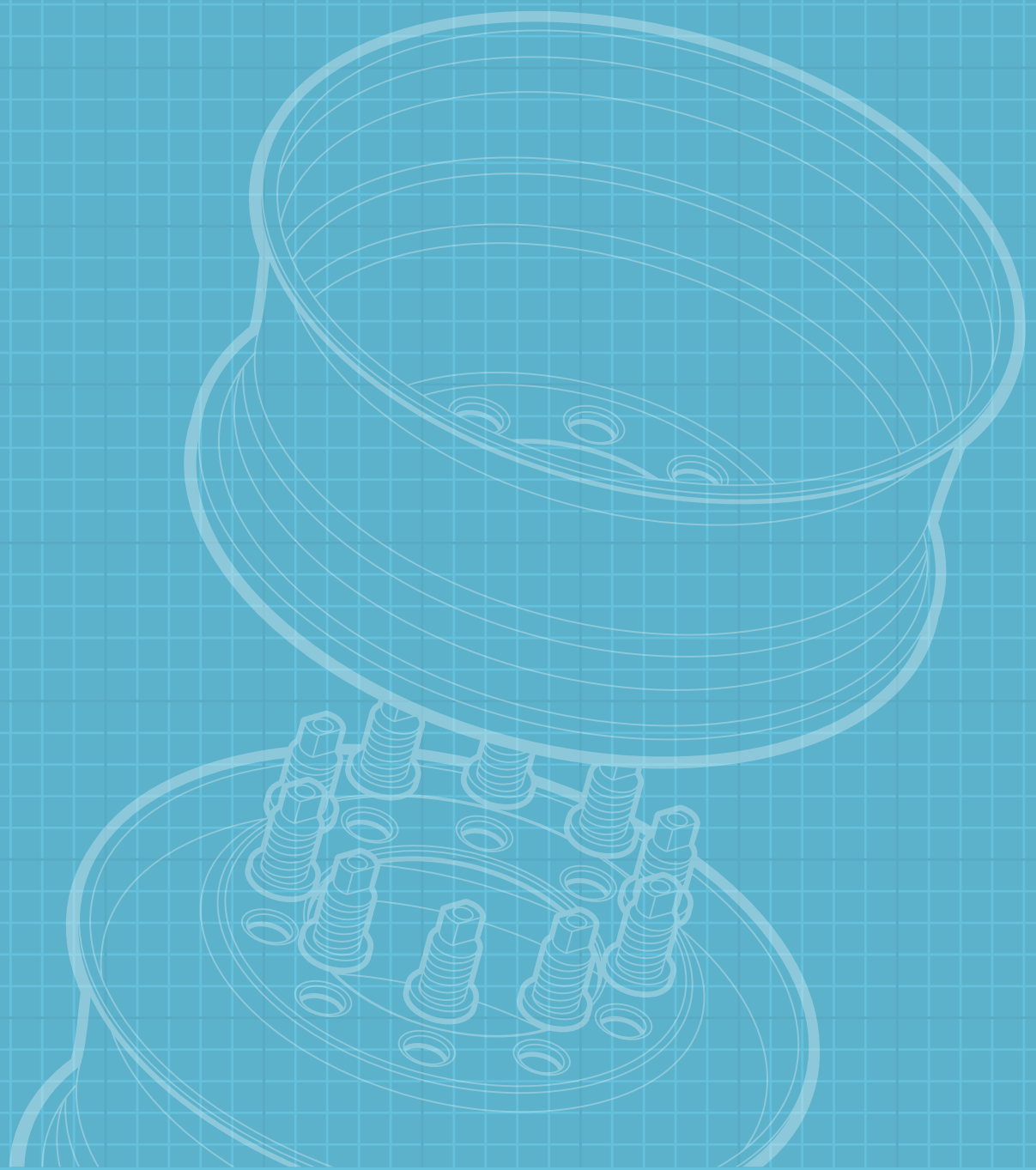

Parts and Procedures	Description of the Defect

10.1 Tires (ss. 120 and 170)

a) Depth of the tread

Using a depth gauge, or by performing a visual inspection, measure the minimum depth of the tread in a main groove or tread design (not at the wear indicator) on all tires.

Note:

1.6 mm is considered to be the height of a tread wear indicator.

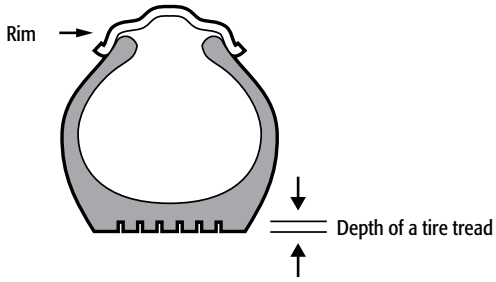

Vehicles whose gross vehicle weight rating (GVWR) is 4,500 kg (9,921 lb) or more:

The depth of the groove of a tire (275) mounted on a steering axle is less than 3.2 mm (4/32 in) (WW**) (s. 120, par. (1)).

** Indicate the measurement in the comments.

The depth of the groove of a tire, (275) other than a tire mounted on a steering axle, is less than 1.6 mm (2/32 in) (WW**) (s. 120, par. (1)).

** Indicate the measurement in the comments.

The depth of two adjacent grooves of a single tire (275) or dual tires in the same wheel assembly is less than 0.8 mm (1/32 in) in depth or 1.6 mm (2/32 in) for a tire mounted on the active steering axle of a motor vehicle (WW**) (s. 170, par. (2)).

** Indicate the measurement in the comments.

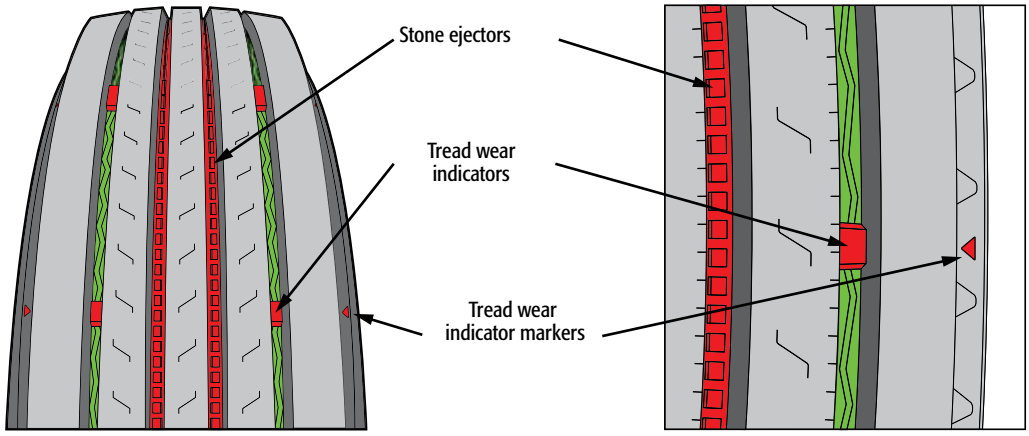

Do not measure at the stone ejectors or tread wear indicators.

Vehicles whose gross vehicle weight rating (GVWR) is less than 4,500 kg (9,921 lb):

The depth of the groove of a tire (275) is less than 1.6 mm (2/32 in) (WW**) (s. 120, par. (1)).

** Indicate the measurement in the comments.

The wear indicator of a tire (275) touches the road (WW**) (s. 120, par. (1)).

** Specify in the comments.

The depth of two adjacent grooves of a single tire (275) or dual tires in the same wheel assembly is less than 0.8 mm (1/32 in) (WW**) (s. 170, par. (2)).

** Indicate the measurement in the comments.

b) Tire condition

Check the condition of the tires, paying special attention to the tread and sidewalls. Look for cuts, misshapen sidewalls indicating a defect in the carcass, or any other anomaly reducing tire safety.

Notes:

- A crack in the sidewall of more than 3.2 mm (1/8 in) due to aging (UV rays, ozone, etc.) is a minor defect (s. 120, par. (2)).

One of the dual tires (275) in the same wheel assembly is worn, cut or damaged to expose the cord or steel belt (AG) (s. 120, par. (2)).

A tire (275) has a crack (Q) in the sidewall that is deeper than 3.2 mm (1/8 in) (s. 120, par. (2)).

A tire (275) is abnormally misshapen (K**) (s. 120, par. (3)).

** Specify in the comments.

One of the dual tires (275) in the same wheel assembly has foreign material (AH**) stuck in the tread or sidewall that could cause a puncture (s. 120, par. (3)).

** Specify "that could cause a puncture" in the comments.

The tread of a tire that has not been recapped or the rubber compound of the sidewall of a tire is separated (QA) from its carcass (275) (s. 120, par. (6)).

The tread of recapped tire (275) shows a separation from its carcass that exceeds 6 mm (1/4 in) in width (QA**) (s. 120, par. (6)).

** Indicate the measurement in the comments.

A tire (275) repair was not performed in accordance with the tire manufacturer's standards (W**) (s. 120, par. (12)).

** Specify in the comments.

Parts and Procedures	Description of the Defect
• The use of studded tires is authorized as of October 15 of a given year until May 1 of the following year for the wheels of any commercial vehicle whose total loaded mass does not exceed 3,000 kg (6,614 lb) and any passenger vehicle, taxi or vehicle comparable to a taxi, provided the vehicle is equipped with studded tires at both ends of an axle and, if the vehicle is equipped with studded tires on the wheels of the front axle, studded tires must also be mounted on the wheels of the rear axle. Failure to comply with this requirement is an offence under section 441 of the *Highway Safety Code* (therefore not a defect).	A valve (278) is worn down, (WW) damaged, (N) scraped, (G) gashed (G) or the exposed portion of the valve is not of sufficient length or accessible to allow for the easy inflation of the tire and pressure reading (IN**) (s. 120, par. (14)). ** Specify in the comments.
• When comparing the tire pressure in the tire with the pressure indicated on the sidewall or the value recommended by the manufacturer, the tire must not have been driven for more than one hour. However, the difference in air pressure in tires of the same axle may be measured at any time. In the case of vehicles whose gross vehicle weight rating is less than 4,500 kg, the air pressure recommended by the manufacturer may be printed on the inside of the glove compartment door or on the post or frame of a door.	The air pressure in a tire (275) is more than 10 % lower (X**) than the pressure in the other tire or tires of the same axle (s. 120, par. (13)). ** Specify in the comments.
• The tire pressure should only be checked if the tire shows signs that the pressure is incorrect.	The air pressure in a tire (275) exceeds the maximum pressure printed on the sidewall (W**) or is lower than the value determined by the manufacturer of the vehicle or of the tire (W**) (s. 120, par. (13)). See the notes in the left-hand column. ** Specify in the comments.
	The tread of a tire (275) has been regrooved (PP**) deeper than the original grooves where there is no indication on the sidewall that the tire is regroovable (s. 120, par. (4)). ** Specify "no indication" in the comments.
	A single tire (275) or dual tires in the same wheel assembly are cut, worn or have any other damage exposing the cord or steel belt (AG) (s. 170, par. (1)).
	A tire (275) has a bulge (QQ**) due to a defect in the carcass, is leaking (T) air, is flat or is inflated only to 50% or less (AB**) of the maximum pressure indicated on the sidewall (s. 170, par. (3)). QQ** Specify "defect in the carcass" in the comments. AB** Indicate the pressure in the comments.
	A single tire (275) or dual tires in the same wheel assembly have foreign material (AH) embedded in the tread or sidewall that could cause a puncture (s. 170, par. (3)).

Section 10

c) Use of the tires

Notes:

- For the purposes of this guide:
  - **Size**

    The width and diameter indicated on the tire.
  - **Construction type**

    Radial or bias ply (standard).
  - **Series**

    The ratio between the height of the sidewall and the width of the tire (series 50, 60, 70 or 80). For example, a series 60 tire means that the height of the rim from the ground equals 60% of the width of the tread.
- Between December 1 of a given year and March 15 of the following year, all motorized road vehicles registered in Québec, except heavy vehicles, tool vehicles and farm machines, are required to be fitted with tires specifically designed for winter driving. Failure to comply with this requirement is an offence under section 440.1 of the *Highway Safety Code* and not a defect.
- Mounting a tire that is larger than the size recommended by the vehicle manufacturer is permitted, provided the tire does not touch the body or any other rigid component of the vehicle in every position of the suspension or steering systems. Where tires larger than the size recommended by the manufacturer are mounted on a vehicle or the suspension has been modified, the vehicle may be subject to section 214 of the *Highway Safety Code*. If in doubt, please contact the Direction générale de l'expertise légale et de la sécurité des véhicules.
- A tire is not mounted in accordance with the manufacturer's standards where:
  - it is mounted on a wheel that is not recommended by the manufacturer (e.g. tire stretching);
  - it is mounted so as to rotate in the wrong direction (for a unidirectional tire).
- Tire contact with the body or any other rigid component can be detected by seeing tire marks on the body or components, or vice-versa.
- A farm trailer is a road vehicle equipped with a drawbar to which a towing coupling device is attached that may be hitched to the coupling device of the towing vehicle with a tow pin and used for the transportation of unprocessed timber, farm products or materials or matters required in their production.

A recapped tire (275) is mounted on the front steering axle of an emergency vehicle, a minibus or a vehicle whose gross vehicle weight rating is 4,500 kg (9,921 lb) or more, (X**) unless the vehicle is equipped with 2 active steering axles (s. 120, par. (5)).

** Specify in the comments.

On an axle or a combination of axles (e.g. tandem axle), a tire (275) differing in size, construction type or series has been mounted, (KK) unless it is recognized by the manufacturer as equivalent (s. 120, par. (7)).

The vehicle is equipped with radial tires (275) on the front and bias-ply tires on the rear, (X**) unless the vehicle has dual rear wheels (s. 120, par. (8)).

** Specify in the comments.

A passenger vehicle is equipped with front tires (275) of a smaller series or that have a tread wider than the rear tires (X**) (s. 120, par. (9)).

** Specify in the comments.

Tires (275) in a dual set differ in diameter, measured at the tread, by more than 13 mm (1/2 in) (X**) or are in contact with one another (AC) (s. 120, par. (10)).

** Specify in the comments.

A tire (275) is of a size smaller (W**) than the minimum dimension indicated by the vehicle manufacturer, unless it is recognized as equivalent by the tire manufacturer. (s. 120, par. (11)).

** Specify in the comments.

A tire (275) touches the body or another rigid component of the vehicle during movement of the suspension or steering (AC**) (s. 120, par. (11)). See the note in the left-hand column.

** Specify in the comments.

A tire (275) bears marks or wording to indicate that it is for restricted use (VV**) or unsuited for use on public roads, (KK**) unless it is mounted on a truck specially adapted for farming purposes or on a farm trailer (s. 120, par. (15)).

** Specify in the comments.

Parts and Procedures	Description of the Defect
• Unlike recapped tires, remolded tires may be mounted on the steering axle of an emergency vehicle, a minibus or a vehicle whose gross vehicle weight rating is 4,500 kg (9,921 lb) or more.	A tire (275) is not mounted on a wheel in accordance with the tire manufacturer's (W**) standards (s. 120, par. (16)). ** Specify in the comments.
	A tire (275) touches (AC) a fixed part of the vehicle (s. 170, par. (4)).
	A single tire (275) or dual tires in the same wheel assembly designed for off-road driving (KK**) are mounted on a road vehicle other than a truck specially adapted for farming purposes or a farm trailer (s. 170, par. (1)). ** Specify in the comments.

10.2 Wheels (ss. 111, 121, 122 and 170)

a) Installation Inspect the wheel fasteners to make sure they are solidly attached. ***Notes:*** • Certain models of bolts installed on heavy vehicles or buses are flush with the outer side of the nuts. No minor defects need to be reported if the manufacturer provides indications to the effect that this installation is compliant. It is important to make sure, however, that these bolts are all the same size and installed in the same configuration. • Nuts or nut covers with a pointed end constitute a minor defect under section 42 of the *Regulation respecting safety standards for road vehicles*, as no part of the road vehicle can have potentially hazardous sharp edges or protrusions. • Rim spacers are not fasteners.	A wheel stud, bolt or nut (273) or any other fastener (277) is damaged, (N) repaired by welds (RR) or of the wrong size (KK**) (s. 121, par. (1)). ** Specify in the comments.
	A bolt (273) does not extend at least one and a half thread grooves beyond a fastener nut (X**) (unless otherwise indicated by the vehicle manufacturer) (s. 121, par. (2)). ** Specify in the comments.
	A wheel fastener (273, 277) is missing, (A) cracked, (Q) broken (F) or not securely fixed (CC) (s. 170, par. (6)).

Section 10

Cast wheel assembly with rims

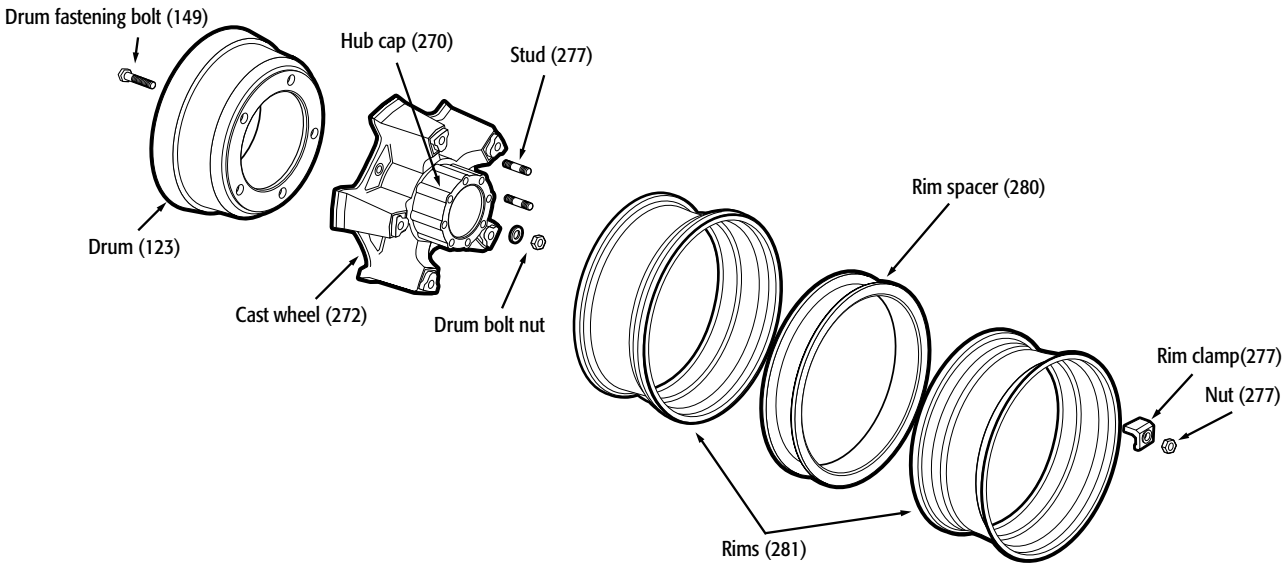

Disc wheel *(272)* ***assembly***

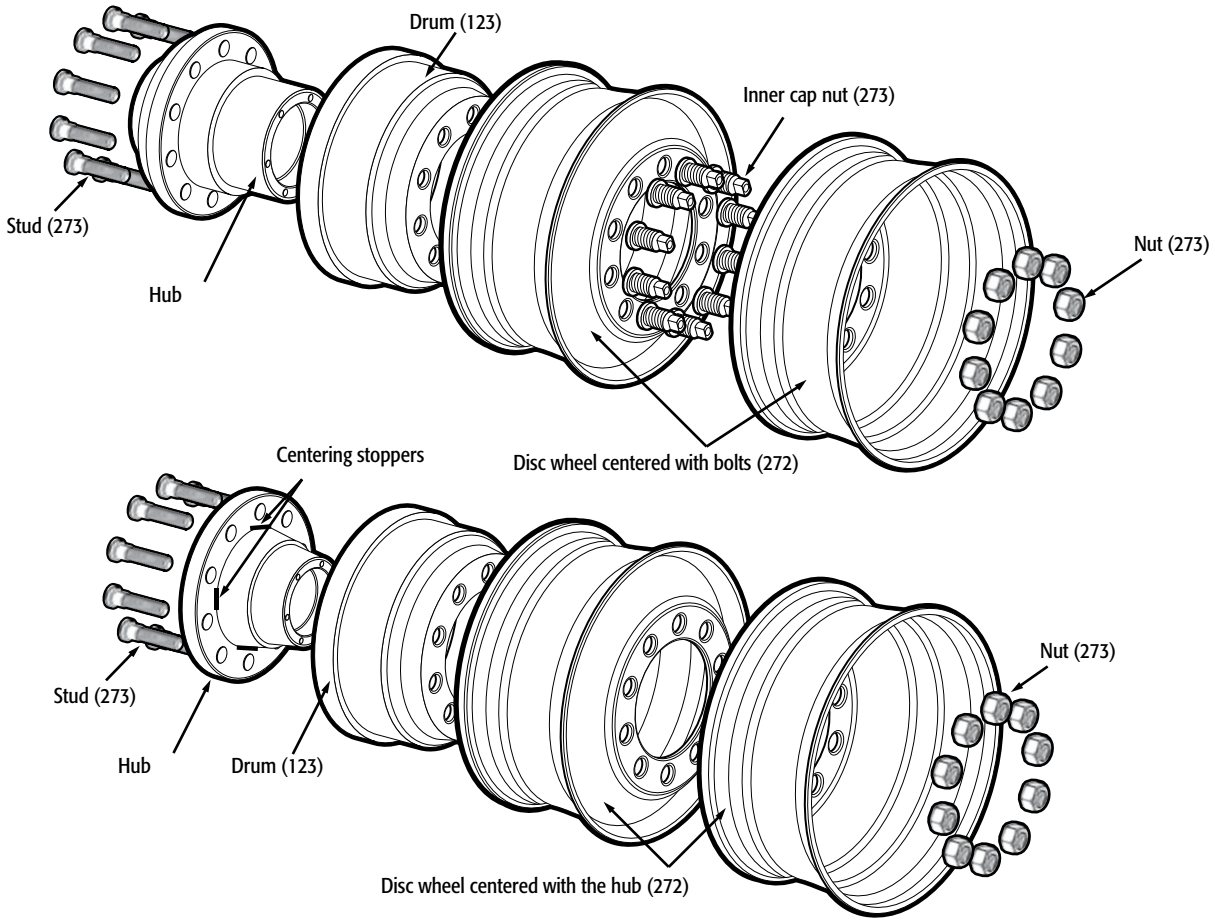

b) Condition

Check the wheels, paying special attention to cracks.

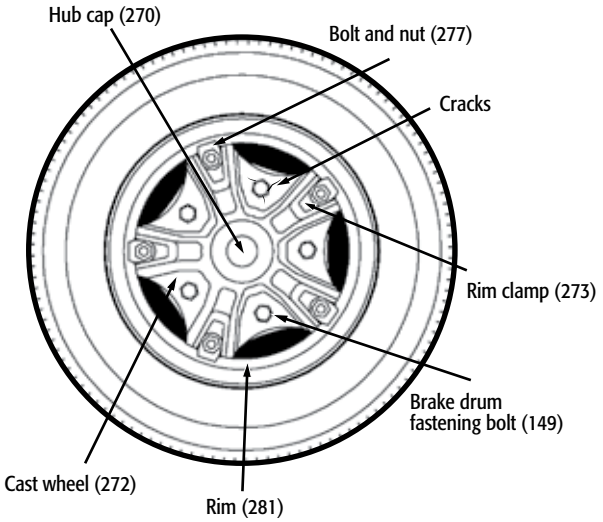

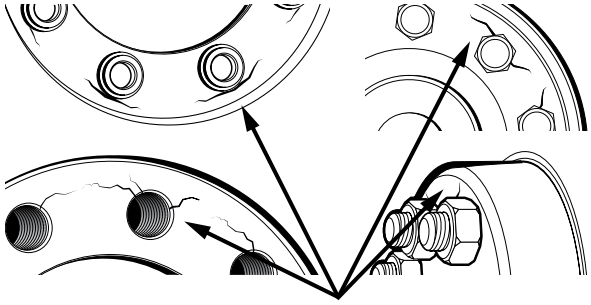

Cracks near the bolt holes or inspection holes on disc wheels.

A wheel (*) is so damaged (N**) or corroded (NA**) that its capacity is reduced, warped, (P) misaligned or bent (K**) (s. 121, par. (3)).

* Indicate the component code.
** Specify in the comments.

A wheel (272,276) shows signs of repair (RR) other than force bands for a spoked wheel and the manufacturer's original welds (s. 121, par. (3)).

Where a wheel is composed of two or three parts, the lock ring (279) has less than 3 mm (4/32 in) clearance at their ends (X**) (s. 121, par. (4)).

** Specify in the comments.

A cast wheel (272) shows evidence of wear in the clamp area (WW**) (s. 121, par. (5)).

** Specify "in the clamp area" in the comments.

A spoke in a spoked wheel (282) is missing, (A) broken, (F) bent (K) or slack (TT) (s. 121, par. (6)).

The spacer (280) between dual wheels is damaged, (N) missing, (A) warped, (K) cracked (Q) or broken (F) (s. 121, par. (7)).

A lock ring (279) for a multipiece wheel is warped, (P) cracked, (Q) poorly adjusted, (BB) bent, (K) broken, (F) not securely mounted, (CC) welded (RR) or not fit (KK**) for the rim on which it is mounted (s. 170, par. (5)).

** Specify in the comments.

A wheel (272,276,281) has a crack, (Q) a breach (F) or an elongated bolt hole (K**) (s. 170, par. (7)).

** Specify in the comments.

A wheel (272,276,281) shows signs of repair by welding, (RR) other than to install a force band on a cast wheel (s. 170, par. (7)).

c) Wheel bearings

Adjustment

To measure the play in the bearings, install a micrometer on the outside circumference of the tire, then:

1. Lift the vehicle so that the wheels are off the ground;
2. Place your hands at the top and bottom of the wheel;
3. Swing the wheel back and forth from the inside to the outside to see if it moves in relation to the steering knuckle.

Note:

This inspection can also be performed using a pry bar placed under the tire. This measurement must not be confused with play in the ball joints or steering knuckles.

A wheel bearing (271) has play measured at the outer circumference of the tire that exceeds the manufacturer's standard (W**) (s. 121.1).

** Specify in the comments.

In the absence of such standard, a wheel bearing (271) has discernible play (Z**) (s. 121.1).

** Specify in the comments.

Working order

With the wheels off the ground, spin the wheel and listen for noise from the bearings.

The bearing (271) causes abnormal noise (WA) (s. 121.1).

Lubrication

It is not mandatory for the wheel hubs to be equipped with a sight glass (inspection window) to check the lubricant level. The lubricant level only has to be checked if the hub is equipped with a sight glass. Moreover, if a hub cap covers the hub, it does not have to be removed to check the wheel bearing lubricant.

A bearing (271) shows leakage, (T) other than oozing, or signs of damage (WA) (s. 121.1).

The wheel bearing (271) lubricant visible through a sight glass is below the minimum level (JJ) (s. 121.1).

The bearing (271) is not properly lubricated (IN**) (s.121.1).

** Specify in the comments.

The wheel bearing (271*) lubricant is missing (A) or, where there is a sight glass, there is no lubricant showing (A) (s. 170, par. (8)).

* Specify "lubricant" in the comments.

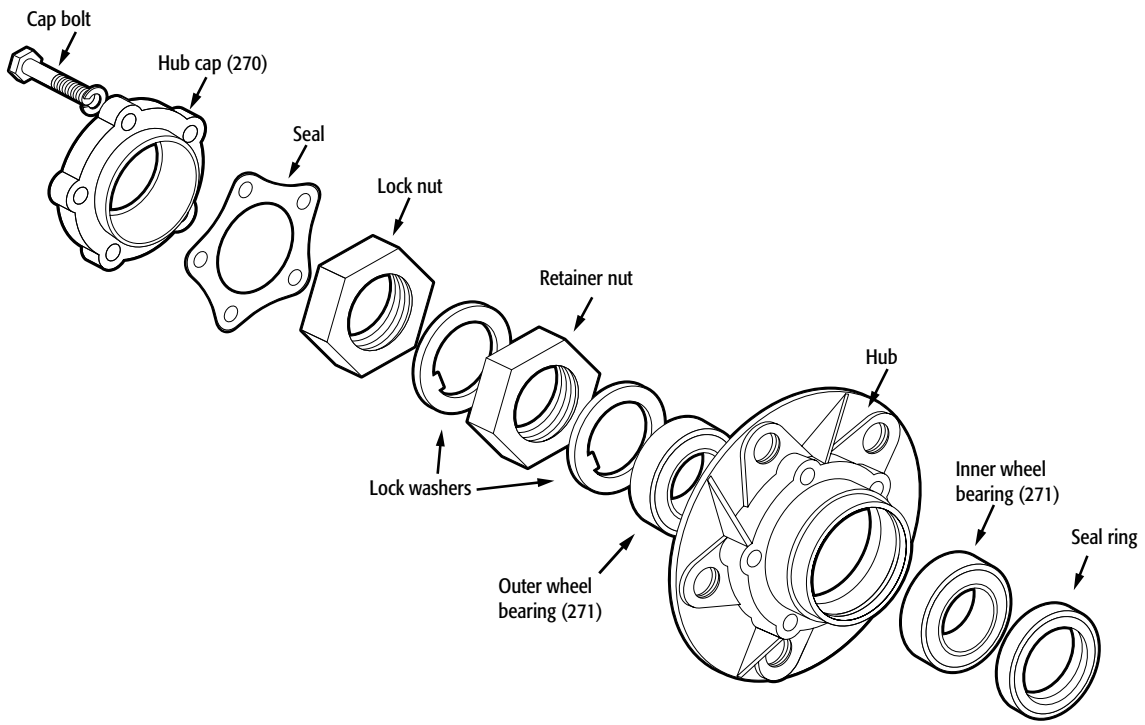

d) Hub cap

Hub cap (270) with wheel bearing lubricant level indicator.

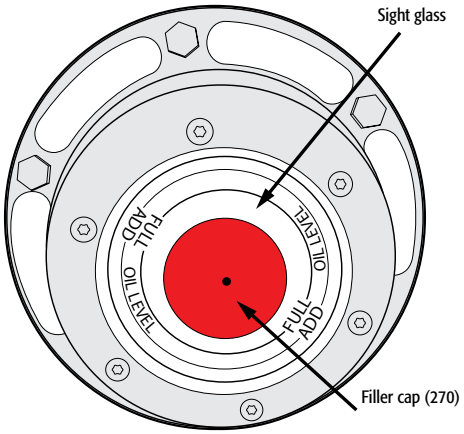

The filler cap, drain plug or hub cap (270) is so damaged (N) that the inside of the hub is exposed, insecurely mounted (CC) or missing (A) (s. 121.1).

e) Spare wheel

Note:

If there is a spare wheel, it must comply with the Regulation.

A part of a tire support or mounting holding the spare wheel (274) is not securely fixed (CC) (s. 122).

The spare wheel and tire (274) are not ready for mounting (IN**) (s. 122).

** Specify in the comments.

10.3 Component and defect codes for the tires and wheels

COMPONENTS	DEFECTS
270 – Hub cap	A – Absent/Missing/Not equipped
271 – Wheel bearing	C – Sharp edge/Protrusion
272 – Wheel	F – Broken
273 – Bolt/Stud/Nut	G – Cut/Torn/Abraded/Scraped
274 – Spare wheel	K – Bent/Elongated
275 – Tires	N – Damaged
276 – Spoke wheel (wire)	P – Warped/Buckled/Bent
277 – Fasteners	Q – Cracked/Grooved
278 – Valve	T – Leak
279 – Lock ring (multi-piece wheel)	W – Does not comply with manufacturer's standards
280 – Wheel spacer	X – Does not comply with regulatory standards
281 – Rim	Z – Abnormal play
282 – Wheel spoke (wire)	AB – Deflated/Flat
	AC – Touches/Allows to come in contact with
	AG – Exposes the cord or carcass
	AH – Foreign material
	BB – Improperly adjusted
	CC – Not securely mounted
	IN – Inadequate
	JJ – Oil level too low
	KK – Inappropriate
	NA – Corroded
	PP – Recut/Regrooved
	QA – Unbound/Separated
	QQ – Bulged
	RR – Welded
	TT – Insufficient tension
	W – Special use
	WA – Damaged/Deteriorated
	WW – Worn

Body

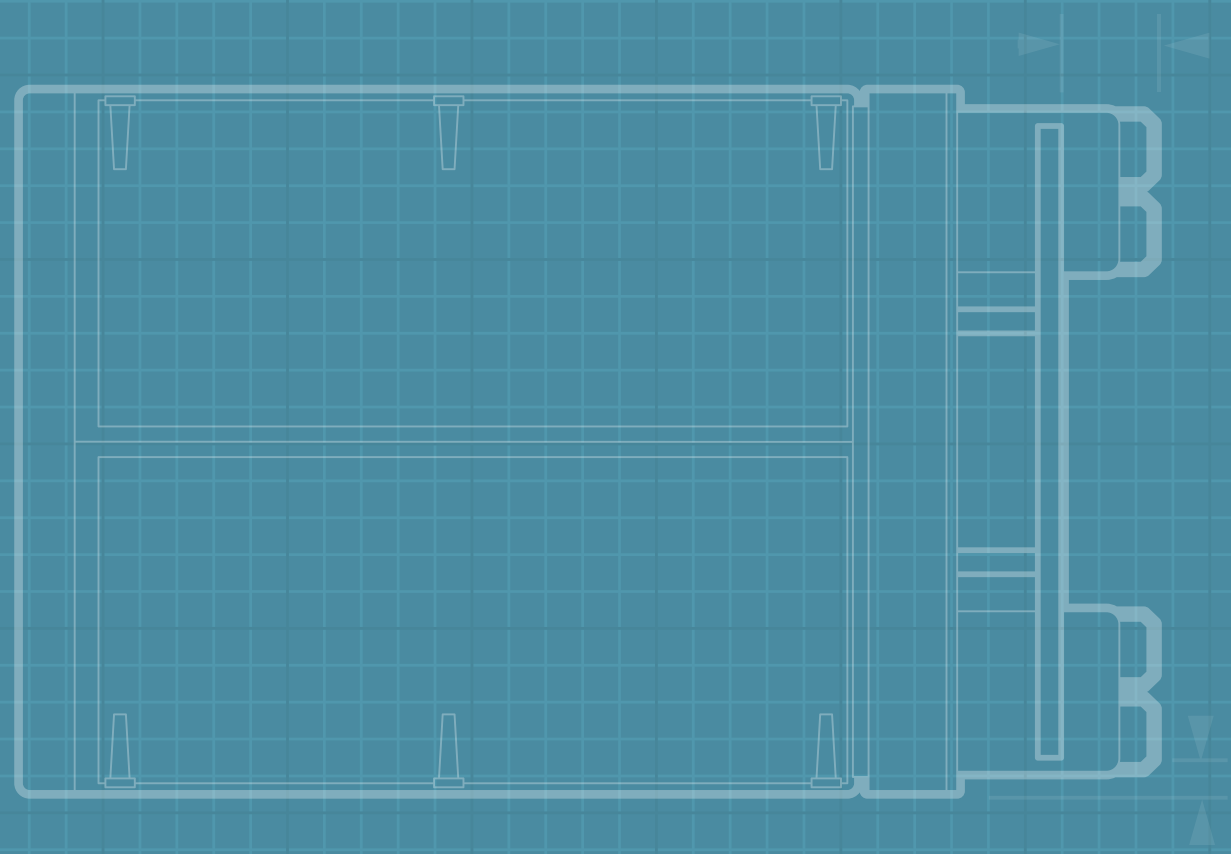

Parts and Procedures	Description of the Defect

General Provisions (ss. 41, 42 and 163)

Check to make sure that no part of the vehicle is missing or has sharp edges or protrusions that could cause injury.

Notes:

- The lower end of the detachable mudguards must not be more than 35 cm (14 in) from the ground when the vehicle is not loaded (s. 273 of the *Highway Safety Code*).
- Every motor vehicle and combination of road vehicles must be equipped with mudguards that are at least as wide as the tread of the tires (s. 272 of the *Highway Safety Code*).
- The tractor truck does not have to be equipped with detachable mudguards when it is hauling a trailer or a semi-trailer that provides adequate protection against material being projected toward the rear.
- The construction trailer does not have to be equipped with mudguards provided that the floor completely covers the width of the tire tread and that the ratio of the length of the overhang to the height between the bottom of the trailer and the ground is not less than 3 (see illustration below). The overhang must be measured from the rear of the trailer to the centre of the last axle.

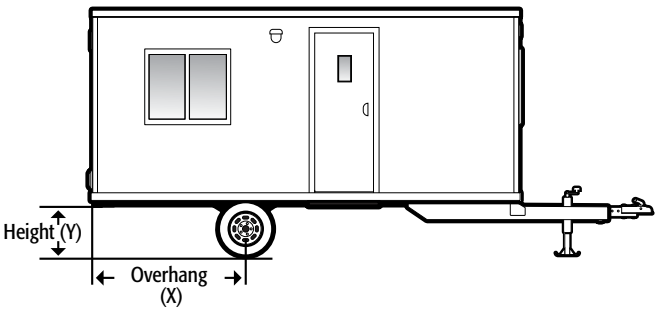

$X/Y \geq 3$

A part (*or 236) of the road vehicle has sharp edges or protrusions (C**) that could cause injury (s. 42).

* Specify the component code. If there is no code, indicate 236.
** Specify "that could cause injury" in the comments.

A fixed component (* or 236) of the body (fender, hood, roof, door, etc.) provided by the manufacturer is missing (A) or not securely mounted (CC) (s. 41).

* Specify the component code. If there is no code, indicate 236.

An accessory (*or 236) (e.g. an exterior luggage rack) or auxiliary equipment (*or 236) (e.g. public road maintenance equipment) is not securely mounted (CC) (s. 41).

* Specify the component code. If there is no code, indicate 236.

An accessory (*or 236) or auxiliary equipment (*or 236) required by the Code is missing (A) or not in good working order (R**) (s. 41).

* Specify the component code. If there is no code, indicate 236.
** Specify in the comments.

A required mudguard (251) is missing (A) or does not comply with the Code (X**) (s. 41) See the notes in the left-hand column.

** Specify in the comments.

A part of the body, (*or 236) equipment (*or 236) or an accessory (*or 236) is not securely fixed and might fall off (AE) the vehicle (s. 163, par. (6)).

* Specify the component code. If there is no code, indicate 236.
** Specify in the comments.

11.1 Engine door or hood (ss. 48 and 163)

Check the following components:

- The safety cables

A safety cable (248*) is missing, (A) not securely mounted (CC) or inadequate (IN**) (s. 48).

* Specify "safety cable" in the comments.
** Specify in the comments.

- The hinges

A hinge (247) is cracked, (Q) broken (F) or not securely mounted (CC) (s. 48).

- The safety hook (if installed by manufacturer)

The safety hook (237) is not securely mounted (CC) or inadequate (IN**) (s. 48).

** Specify in the comments.

The front hood (237) does not engage fully (WB) when closed (s. 163, par. (2)).

- The locking device

Note:
A locking device is inadequate where it is seized up or does not work.

The locking device (248) is not securely mounted (CC) or inadequate (IN**) (s. 48).

** Specify in the comments.

11.2 Cab (ss. 48, 49 and 57)

Check the following components:

- The main locking or safety device

Note:
A locking device is inadequate where it is seized up or does not work.

The locking device (248*) is inadequate (IN**) or one of its components does not work properly, (R**) is broken, (F) missing (A) or cracked (Q) (s. 49).

* Specify "of the cab" in the comments.
** Specify in the comments.

- The hold-down device (including the hinges)

The hold-down device (248*) is inadequate (IN**) or one of its components is broken, (F) cracked, (Q) missing (A) or not securely mounted (CC) (s. 49).

* Specify "of the cab" in the comments.
** Specify in the comments.

- The pneumatic suspension of the cab

The pneumatic suspension of the cab (84*) has an air leak (T) (s. 57).

* Specify "of the cab" in the comments.

The pneumatic suspension of the cab (84*) causes a slope (AD) of the cab (cab is not level) (s. 57).

* Specify "of the cab" in the comments.

A shock absorber (77*) of the cab is missing, (A) not securely mounted (CC) or leaks in a way that hampers its performance (T) (s. 57).

* Specify "of the cab" in the comments.

11.3 Bumpers (ss. 43 and 44)

Check to make sure the bumpers are present, solidly attached and in good condition.

Notes:

- A rear bumper is only required if it was part of the original equipment installed by the manufacturer.
- A vehicle must be equipped with a bumper in the following cases:
  - Semi-trailers longer than 15.5 m (50 ft 10 in) without exceeding 16.2 m (53 ft);
  - The last semi-trailer (manufactured after June 16, 1997) in a Type B double road train measuring more than 23 m (75 ft 5 ½ in) in length without exceeding 25 m (82 ft);
  - Trailers or semi-trailers whose gross vehicle weight rating is 4,536 kg (10,000 lb) or more (manufactured after September 23, 2005).
- The bumper must be composed of a rigid beam installed horizontally and securely mounted to the vehicle and comply with the following standards:

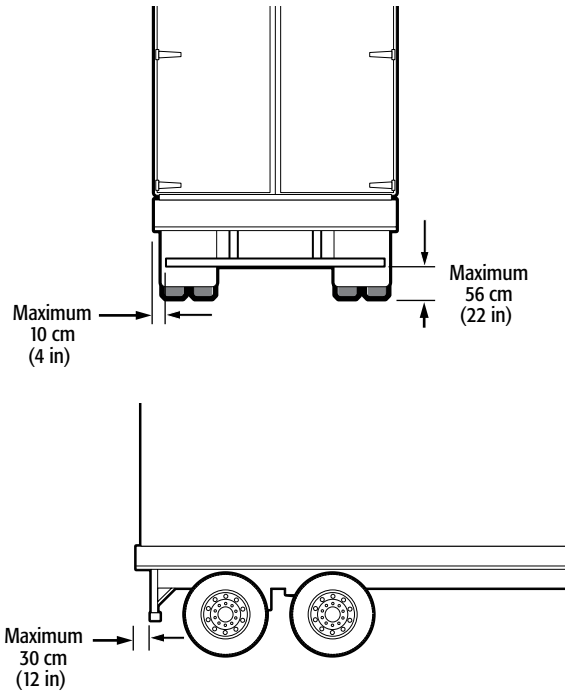

Note:

A bumper is not mandatory if the distance between the tires on the rear axle and the rear end of the semi-trailer is less than 30 cm (12 in), or if the height of the bottom of the structure at the rear of the semi-trailer is less than 56 cm (22 in) above the ground.

A bumper (240) or its supports (250) provided by the manufacturer are missing (A) or of a different size or material than those intended by the manufacturer (W**) (s. 43).

** Specify in the comments.

A bumper (240) is not securely mounted (CC) (s. 41).

The bumper (240) on a trailer or semi-trailer that is subject to the requirement to be equipped with a bumper does not comply with standards (X**) (s. 44). Refer to the illustrations for the standards in question.

** Specify in the comments.

11.4 Passenger compartment doors (ss. 45 and 163)

Inspect all passenger compartment doors, including emergency doors, to make sure they open and close and engage properly from both inside and outside.

Note:

Some passenger vehicles are equipped with a child lock system to prevent unwanted opening of the rear doors from inside the vehicle.

- A door (238) is not securely mounted (CC) (s. 45).
- A door (238) does not open (GG) (see the note in the left-hand column) or does not open easily (R) from the inside or the outside (s. 45).
- A hinge (247) is missing, (A) cracked, (Q) broken (F) or seized up (U) (s. 45).
- A door (238) does not engage completely when it is closed (WB) (s. 163, par. (2)).

11.5 Doors or covers of load space or auxiliary compartments (s. 46)

Inspect all doors or covers providing access to a load space or an auxiliary compartment, including the rear panel of a dump body, to make sure they are in good condition and proper working order.

- A door or cover (235) is not securely mounted to the vehicle (CC) or does not close properly (WB) (s. 46).
- The device (248*) preventing the door from opening while the vehicle is in motion is missing (A) or not in proper working order (R) (s. 46).

  * Specify "door or cover" in the comments.
- The device (248*) preventing the door or cover from closing when it must remain open, if such a mechanism was fitted by the vehicle manufacturer, is not in proper working order (R) (s. 46).

  * Specify "door or cover" in the comments.

11.6 Passenger compartment floor and steps (ss. 51 and 163, par. (5))

Check the condition of the passenger compartment floor and steps.

- The floor (245) or a step (356) of the passenger compartment is warped, (K) cracked (Q) or perforated (NN) (s. 51).
- The floor (245) of the passenger compartment is so perforated (NN**) that it constitutes a hazard for passengers by reason of a lack of solidity (s. 163, par. (5)).

  ** Specify "lack of solidity" in the comments.

11.7 Load space (s. 51)

Check the condition of the load space.

The floor (246) or a side (221) of the load space does not prevent the load from falling out (NN) (s. 51).

11.8 Air bags and seat belts (ss. 5 and 80)

To check the working order of the air bags, start the engine and make sure the indicator light comes on and then turns off after a few seconds.

Inspect all seat belts in the vehicle to make sure they work properly and are not damaged.

Notes:

- Some seat belts are equipped with hypertension indicators. If such an indicator is visible, the seat belt must be replaced.
- A seat belt that is missing when its seat or bench seat has been removed shall be deemed compliant.
- The seat belt of the driver's seat, referred to in s. 163, par. (9), also includes its anchorages, buckle, retractor and locking mechanism.
- With regard to seat belts, additional requirements apply to military-type road vehicles. (Refer to Appendix 4.)

An air bag (335) that was installed when the road vehicle was manufactured is missing, (A) damaged (WA) or altered (FF) (s. 80).

The indicator light for the air bag system (5*) does not come on when the ignition key is in the "ON" position (X**) or does not go off (X**) after a few seconds (s. 80).

* Specify "of the air bag system" in the comments.
** Specify "does not come on" or "does not go off" in the comments.

A seat belt (324) is missing, (A) damaged (WA) or altered (FF) (s. 80). (Specific requirements apply to military-type road vehicles. Refer to Appendix 4.)

A seat belt anchorage (324*) is not securely mounted (CC) (s. 80).

* Specify "seat belt anchorage" in the comments.

The buckle of a seat belt (324*) is missing (A) or inadequate (IN**) (s. 80).

* Specify "buckle of a seat belt" in the comments.
** Specify in the comments.

The retractor (324*) or the locking mechanism (324*) of a seat belt is missing (A) or inadequate (IN**) (s. 80).

* Specify "retractor or locking mechanism of a seat belt" in the comments.
** Specify in the comments.

An air bag (335*) for the driver is missing, (A) modified (FF) or inadequate (IN**) (s. 163, par. (10)).

The seat belt (324*) of the driver's seat is missing, (A**) modified (FF**) or inadequate (IN**) (s. 163, par. (9)).

* Specify "of the driver's seat" in the comments.
** Specify in the comments.

11.9 Seats and bench seats (s. 50)

Inspect the seats and bench seats.

Notes:

- A seat or a bench seat is inadequate where it is not mounted in its rails or the anchorages originally installed by the manufacturer or its structure is damaged or modified, which renders it inappropriate for the purpose for which it is used.
- With regard to seats, additional requirements apply to military-type road vehicles. (Refer to Appendix 4.)

A seat or bench seat (333) is not securely fixed (CC) or inadequate (IN**) (s. 50).

** Specify in the comments.

An adjustable seat or bench seat (333) cannot be moved or does not remain locked in the chosen position (R) (s. 50).

A cushion or a backrest (333*) is not securely fixed (CC) (s. 50).

* Specify which cushion or backrest in the comments.

A headrest (334) installed when the vehicle was manufactured is missing (A) or inadequate (IN**) (s. 50).

** Specify in the comments.

The seat cushion upholstery (333*) of a bus, minibus or motor coach is torn (G**) over a length of more than 75 mm (3 in), an area of more than 6,400 mm² (10 in²) in a depth of more than 6.5 mm (1/4 in) (s. 50).

* Specify "seat cushion upholstery" in the comments.
** Specify the measurement in the comments.

11.10 Service and exit doors (ss. 52, 53 and 163)

Inspect the following components:

- Warning light or buzzer

Note :

A warning light or buzzer is inadequate where it does not work.

- Flexible seals

- Automatic exit door opening system

Check the working order of the system by activating the control.

Notes:

- An automatic door-opening system is actuated by a pressure-sensitive hinged gate, door step, door edge or a presence detection system.
- A door-opening system is inadequate where it does not work properly.

The warning light (365) or buzzer of a door is inadequate (IN**) (s. 52, par. (1)).

** Specify in the comments.

A flexible seal (368) installed on the edge of the doors by the manufacturer is missing, (A) torn (G) or loose (CC) (s. 52, par. (2)).

The automatic door-opening system (361*) of the exit door is inadequate (IN**) (s. 53, par. (1)).

* Specify "automatic door-opening system" in the comments.
** Specify in the comments.

When the exit door actuated by an automatic door-opening system is closed and it is opened with a moderate push, the warning light or buzzer (365) does not go on or sound (GG) when the door is opened (s. 53, par. (2)).

Parts and Procedures	Description of the Defect
• Safety device (exit door actuated by an automatic door-opening system)	When the exit door actuated by an automatic door-opening system is open, the brake and accelerator interlock mechanisms (364*) do not work (GG**) (s. 53, par. (3)). * Specify "automatic door-opening system" in the comments. ** Specify in the comments.
	The safety system (364) protecting against the accidental opening of doors is out of order (R) (for a bus equipped with automatic doors) (s. 163, par. (3)).

11.11 Emergency exit (ss. 54 and 163)

Check the following:

• Working order Check the working order of all emergency exits. ***Notes:*** • An emergency window does not open easily if a force of more than 180 N (40 lb) is required. • If the vehicle is equipped with wheelchair locking devices, the passageway to the emergency exits must be over 81.2 cm (32 in) wide. • An emergency exit is a door, a window or a roof exit panel.	The emergency window (362) cannot be easily opened or closed from the inside and, if a release mechanism is so designed, from the outside (R**) (s. 54, par. (3)). ** Specify in the comments.
	An emergency exit (362) is blocked, (LL) inadequate (IN**) or does not open (GG) (s. 163, par. (4)). ** Specify in the comments.
• Warning light or buzzer Turn the ignition key to the "ON" position, open the emergency exit and check the working order of the warning light or buzzer if the emergency exit is so equipped.	The warning light or buzzer (365*) for emergency exits, except doors, does not work (GG) (s. 54, par. (3)). * Specify "emergency exits except doors" in the comments.
	The warning light or buzzer (365*) of an emergency door is out of order (GG) (s. 163, par. (4)). * Specify "emergency door" in the comments.
• Signs Check to make sure the signs are present, legible and in good condition.	The signs provided by the manufacturer with respect to emergency exits (370) are missing (A) or illegible (N) (s. 54, par. (5)).

11.12 Interior equipment (s. 56)

Inspect the following components:

- Floor and step covering

The floor and step covering at the entrance (358) is so cracked, (Q**) loose (QA**) or worn (WW**) that there is a danger of tripping (s. 56, par. (1)).

** Specify "that there is a danger of tripping" in the comments.

- Safety components: stanchions, horizontal bars, grab handles, guard panels, seatbacks

A safety component (371*) is not securely mounted (CC) (s. 56, par. (2)).

* Specify in the comments.

The shock-absorbing material (359) provided by the manufacturer is missing (A) or inadequate (IN**) (s. 56, par. (4)).

** Specify in the comments.

- Passenger compartment and luggage rack

The passenger compartment (241*) has a protrusion (C**) that could injure a passenger (s. 56, par. (3)).

* Specify the component in the comments.
** Specify "that could injure" in the comments.

The luggage compartment (366) or the luggage rack (366) is not securely mounted (CC) or a component (366*) is missing, (A) broken (D) or damaged (WA) (s. 56, par. (5)).

* Specify which component in the comments.

11.13 Equipment for transporting persons with disabilities (s. 55)

Inspect the following components:

- The wheelchair locking device

The locking device (243*) is not securely fixed (CC) to the road vehicle, damaged (WA) or inadequate (IN**) (s. 55, par. (1)).

* Specify "for disabled persons" in the comments.
** Specify in the comments.

- The platform lift
  Operate the control system.

The platform lift (242*) does not react adequately to the commands of the control mechanism or jerks when operating (R) (s. 55, par. (2)).

* Specify "for disabled persons" in the comments.

The platform lift (242*) is not securely fixed (CC) to the road vehicle (s. 55, par. (2)).

* Specify "for disabled persons" in the comments.

The platform lift (242*) does not retract completely (GG**) (s. 163, par. (6)).

* Specify "passenger access" in the comments.
** Specify in the comments.

Parts and Procedures	Description of the Defect
• The access ramp	The access ramp (244*) is inadequate (IN**) while it is not deactivated (s. 55, par. (3)). * Specify "passenger access" in the comments. ** Specify in the comments. The access ramp (244*) is not securely fixed (CC) to the road vehicle (s. 55, par. (3)). * Specify "passenger access" in the comments. The alarm and locking system (365*) is missing (A) or inadequate (IN**) while the access ramp is not deactivated (s. 55, par. (4)). * Specify "for the ramp" in the comments. ** Specify in the comments. The access ramp (244*) does not retract completely (GG**) (s.163, par. (6)). * Specify "passenger access" in the comments. ** Specify in the comments.

11.14 Component and defect codes for the body

COMPONENTS	DEFECTS
5 – Indicator lamp	A – Absent/Missing/Not equipped
77 – Shock absorber	C – Sharp edge/Protrusion
84 – Pneumatic suspension	D – Broken
221 – Panel	F – Broken
235 – Door/Cover	G – Cut/Torn/Abraded/Scraped
236 – Body	K – Bent/Elongated
237 – Hood/Safety hook	N – Damaged
238 – Door	Q – Cracked/Grooved
239 – Fender	R – Does not work properly
240 – Bumper	T – Leak
241 – Cab/Passenger compartment	U – Seized up/Stuck
242 – Elevator platform	W – Does not comply with manufacturer's standards
243 – Locking device (wheelchair)	X – Does not comply with regulatory standards
244 – Access ramp	AD – Sagging
245 – Floor (passenger compartment)	AE – Risk of rupture/Separation
246 – Floor (load space)	CC – Not securely mounted
247 – Hinge	FF – Modified/Poorly repaired
248 – Safety hook	GG – Does not work
249 – Step	IN – Inadequate
250 – Bumper supports	LL – Blocked
251 – Mudguards	NN – Perforated/Holes (caused by rust)
324 – Seat belt	QA – Unbound/Separated
333 – Bench seat/Seat	WA – Damaged/Deteriorated
334 – Headrest	WB – Improperly engaged/Not locked in/Improperly blocked
335 – Air bag	WW – Worn
356 – Entrance step	
358 – Non-slip surface/Floor covering	
359 – Shock-absorbing material	
361 – Exit door	
362 – Emergency exit	
364 – Protection system (door)	
365 – Alarm signal	
366 – Luggage rack	
368 – Seal	
370 – Signals	
371 – Safety component	

Appendix 1

Pressure Conversion Table

psi	kPa	bar	psi	kPa	bar	psi	kPa	bar	psi	kPa	bar
1.00	6.90	0.07	41.00	282.90	2.83	81.00	558.90	5.58	121.00	834.90	8.34
2.00	13.80	0.14	42.00	289.80	2.90	82.00	565.80	5.65	122.00	841.80	8.41
3.00	20.70	0.21	43.00	296.70	2.96	83.00	572.70	5.72	123.00	848.70	8.48
4.00	27.60	0.28	44.00	303.60	3.03	84.00	579.60	5.79	124.00	855.60	8.55
5.00	34.50	0.34	45.00	310.50	3.10	85.00	586.50	5.86	125.00	862.50	8.62
6.00	41.40	0.41	46.00	317.40	3.17	86.00	593.40	5.93	126.00	869.40	8.69
7.00	48.30	0.48	47.00	324.30	3.24	87.00	600.30	6.00	127.00	876.30	8.76
8.00	55.20	0.55	48.00	331.20	3.31	88.00	607.20	6.07	128.00	883.20	8.83
9.00	62.10	0.62	49.00	338.10	3.38	89.00	614.10	6.14	129.00	890.10	8.89
10.00	69.00	0.69	50.00	345.00	3.45	90.00	621.00	6.21	130.00	897.00	8.96
11.00	75.90	0.76	51.00	351.90	3.52	91.00	627.90	6.27	131.00	903.90	9.03
12.00	82.80	0.83	52.00	358.80	3.59	92.00	634.80	6.34	132.00	910.80	9.10
13.00	89.70	0.90	53.00	365.70	3.65	93.00	641.70	6.41	133.00	917.70	9.17
14.00	96.60	0.97	54.00	372.60	3.72	94.00	648.60	6.48	134.00	924.60	9.24
15.00	103.50	1.03	55.00	379.50	3.79	95.00	655.50	6.55	135.00	931.50	9.31
16.00	110.40	1.10	56.00	386.40	3.86	96.00	662.40	6.62	136.00	938.40	9.38
17.00	117.30	1.17	57.00	393.30	3.93	97.00	669.30	6.69	137.00	945.30	9.45
18.00	124.20	1.24	58.00	400.20	4.00	98.00	676.20	6.76	138.00	952.20	9.51
19.00	131.10	1.31	59.00	407.10	4.07	99.00	683.10	6.83	139.00	959.10	9.58
20.00	138.00	1.38	60.00	414.00	4.14	100.00	690.00	6.89	140.00	966.00	9.65
21.00	144.90	1.45	61.00	420.90	4.21	101.00	696.90	6.96	141.00	972.90	9.72
22.00	151.80	1.52	62.00	427.80	4.27	102.00	703.80	7.03	142.00	979.80	9.79
23.00	158.70	1.59	63.00	434.70	4.34	103.00	710.70	7.10	143.00	986.70	9.86
24.00	165.60	1.65	64.00	441.60	4.41	104.00	717.60	7.17	144.00	993.60	9.93
25.00	172.50	1.72	65.00	448.50	4.48	105.00	724.50	7.24	145.00	1000.50	10.00
26.00	179.40	1.79	66.00	455.40	4.55	106.00	731.40	7.31	146.00	1007.40	10.07
27.00	186.30	1.86	67.00	462.30	4.62	107.00	738.30	7.38	147.00	1014.30	10.14
28.00	193.20	1.93	68.00	469.20	4.69	108.00	745.20	7.45	148.00	1021.20	10.20
29.00	200.10	2.00	69.00	476.10	4.76	109.00	752.10	7.52	149.00	1028.10	10.27
30.00	207.00	2.07	70.00	483.00	4.83	110.00	759.00	7.58	150.00	1035.00	10.34
31.00	213.90	2.14	71.00	489.90	4.90	111.00	765.90	7.65	151.00	1041.90	10.41
32.00	220.80	2.21	72.00	496.80	4.96	112.00	772.80	7.72	152.00	1048.80	10.48
33.00	227.70	2.28	73.00	503.70	5.03	113.00	779.70	7.79	153.00	1055.70	10.55
34.00	234.60	2.34	74.00	510.60	5.10	114.00	786.60	7.86	154.00	1062.60	10.62
35.00	241.50	2.41	75.00	517.50	5.17	115.00	793.50	7.93	155.00	1069.50	10.69
36.00	248.40	2.48	76.00	524.40	5.24	116.00	800.40	8.00	156.00	1076.40	10.76
37.00	255.30	2.55	77.00	531.30	5.31	117.00	807.30	8.07	157.00	1083.30	10.82
38.00	262.20	2.62	78.00	538.20	5.38	118.00	814.20	8.14	158.00	1090.20	10.89
39.00	269.10	2.69	79.00	545.10	5.45	119.00	821.10	8.20	159.00	1097.10	10.96
40.00	276.00	2.76	80.00	552.00	5.52	120.00	828.00	8.27	160.00	1104.00	11.03

Appendix 2

Measurement Conversion Table

IMPERIAL SYSTEM (INCHES)		METRIC SYSTEM (MILLIMETRES)			
Fraction	Thousandths of in	0-1 in	1-2 in	2-3 in	3-4 in
			25.40	50.80	76.20
1/64	0.015	0.397	25.80	51.20	76.60
1/32	0.031	0.794	26.19	51.59	76.99
3/64	0.046	1.191	26.59	51.99	77.39
1/16	0.062	1.588	26.99	52.39	77.79
5/64	0.078	1.984	27.38	52.78	78.18
3/32	0.093	2.381	27.78	53.18	78.58
7/64	0.109	2.778	28.18	53.58	78.98
1/8	0.125	3.175	28.58	53.98	79.38
9/64	0.140	3.572	28.97	54.37	79.77
5/32	0.156	3.969	29.37	54.77	80.17
11/64	0.171	4.366	29.77	55.17	80.57
3/16	0.187	4.763	30.16	55.56	80.96
13/64	0.203	5.159	30.56	55.96	81.36
7/32	0.218	5.556	30.96	56.36	81.76
15/64	0.234	5.953	31.35	56.75	82.15
1/4	0.250	6.350	31.75	57.15	82.55
17/64	0.265	6.747	32.15	57.55	82.85
9/32	0.281	7.144	32.54	57.94	83.34
19/64	0.296	7.541	32.94	58.34	83.74
5/16	0.312	7.938	33.34	58.74	84.14
21/64	0.328	8.334	33.73	59.13	84.53
11/32	0.343	8.731	34.13	59.53	84.93
23/64	0.359	9.128	34.53	59.93	85.33
3/8	0.375	9.525	34.93	60.33	85.73
25/64	0.390	9.922	35.52	60.72	86.12
13/32	0.406	10.319	35.72	61.12	86.52
27/64	0.421	10.716	36.12	61.52	86.92
7/16	0.437	11.113	36.51	61.91	87.31
29/64	0.453	11.509	36.91	62.31	87.71
15/32	0.468	11.906	37.31	62.71	88.11
31/64	0.484	12.303	37.70	63.10	88.50
1/2	0.500	12.700	38.10	63.50	88.90
33/64	0.515	13.097	38.50	63.90	89.30
17/32	0.531	13.494	38.89	64.29	89.69
35/64	0.546	13.891	39.29	64.69	90.09
9/16	0.562	14.288	39.69	65.09	90.49
37/64	0.578	14.684	40.08	65.48	90.88
19/32	0.593	15.081	40.48	65.88	91.28
39/64	0.609	15.478	40.88	66.28	91.68
5/8	0.625	15.875	41.28	68.68	92.08
41/64	0.640	16.272	41.67	67.07	92.47
21/32	0.656	16.669	42.07	67.47	92.87
43/64	0.671	17.066	42.47	67.87	93.27
11/16	0.687	17.463	42.86	68.26	93.66
45/64	0.703	17.859	43.26	68.66	94.06
23/32	0.718	18.256	43.66	69.06	94.46
47/64	0.734	18.653	44.05	69.45	94.85
3/4	0.750	19.050	44.45	69.85	95.25
49/64	0.765	19.447	44.85	70.25	95.65
25/32	0.781	19.844	45.24	70.64	96.04
51/64	0.796	20.241	45.64	71.04	96.44
13/16	0.812	20.638	46.04	71.44	96.84
53/64	0.828	21.034	46.43	71.83	97.23
27/32	0.843	21.431	46.83	72.23	97.63
55/64	0.859	21.828	47.23	72.63	98.03
7/8	0.875	22.225	47.63	73.03	98.43
57/64	0.890	22.622	48.02	73.42	98.82
29/32	0.906	23.019	48.42	73.82	99.22
59/64	0.921	23.416	48.82	74.22	99.62
15/16	0.937	23.813	49.21	74.61	100.01
61/64	0.953	24.209	49.61	75.01	100.41
31/32	0.968	24.606	50.01	75.41	100.81
63/64	0.984	25.003	50.40	75.80	101.20

Appendix 3

Information on Glazing Materials

Location of Glazing Material Codes

The numbers in the list below follow the letters "AS" to form the codes that you should find on a vehicle at the specified locations. These codes correspond to various types of glazing materials listed in the ANSI Z26.1 standard developed for safety glazing materials by the American National Standards Institute:

1. Safety glazing material suitable for all motor vehicle windows
2. Safety glazing material suitable for all motor vehicle windows, except the windshield
3. Safety glazing material suitable for motor vehicle windows, except the windshield and specified areas
4. Safety glazing material suitable for specific areas of motor vehicle windows
5. Safety glazing material suitable for specific areas of motor vehicle windows where the driver's vision is not in question
6. Safety glazing material suitable for windows of motor homes or trailers, the rear window of convertibles, the windshield of motorcycles, mobile blinds or removable windows, or fans used in combination with removable windows
7. Safety glazing material suitable for windows of motor homes or trailers and, at heights where the driver's vision is not in question, for the rear window of convertibles, the windshield of motorcycles, mobile blinds or removable windows, or fans used in combination with removable windows
8. Safety glazing material suitable solely for folding doors, the top windows of a bus, windows of motor homes or trailers, the window behind the driver's compartment in a truck or tractor truck and rear windows of buses
9. Safety glazing material suitable solely for windows of motor homes or trailers, the top windows of buses and, where the driver's vision is not in question, for folding doors, the window behind the driver's compartment in a truck or tractor truck and rear windows of buses
10. Safety glazing material suitable wherever bullet resistance is required for all motor vehicle windows
11. Safety glazing material suitable wherever bullet resistance is required for all motor vehicle windows, except the windshield

Appendix 4

Military-Type Road Vehicles

Foreword

Military-type road vehicles that are not homologated for road use when they are manufactured may now obtain a valid authorization to be operated on the road network in Québec under certain conditions.

The main element by which a military-type road vehicle can be identified is its vehicle identification number (VIN). Thus, in the specific case of this type of vehicle, if the VIN cannot be used to check whether or not a vehicle complied with the applicable federal standards when it was manufactured, it must meet the regulatory requirements specific to a military-type road vehicle.

Homologation of all vehicles, including military vehicles, does not change according to its use and is determined when it is designed, manufactured and put on the market. Road homologation recognized by the manufacturer authorizes the vehicle's use on the road network in Québec.

In the case of a military-type vehicle that has not been homologated for road use when it was manufactured, specific requirements apply. The vehicle is homologated with a certificate by an engineer if the applicant wishes to use the vehicle on the entire road network, and only subject to a compliant mechanical inspection if the vehicle is to be used exclusively on roads where the speed limit is 70 km/h or less.

It should be noted that this entire Guide applies to military-type road vehicles, in addition to the particularities presented in Appendix 4.

General Information

Operation on any public road

When the owner of a military-type road vehicle applies for the vehicle's registration and the authorization to operate the vehicle on any public road, the owner must provide the SAAQ with a certificate by an engineer stating that the vehicle is safe to operate on these types of roads. This certificate, provided following a verification of the vehicle's components and assembly and taking into account the year of manufacture, must include:

1) the date of the verification and the certificate;
2) a description of the vehicle, including its identification number, make, model, year of manufacture, the number of engine cylinders, engine displacement and type of fuel;
3) the vehicle's net weight and gross vehicle weight rating;
4) the engineer's declaration stating that the vehicle is safe to operate on any public road;
5) the engineer's name, address, signature and member number.

The certificate must be prepared using the form available on the SAAQ website. This certificate is recognized as homologation with regard to the sections of the RRSSRV that deal with the specific standards that apply to military vehicles.

After receiving this certificate, the owner must obtain a compliant mechanical inspection certificate in order for the vehicle to be authorized for road use without restriction.

Operation on roads where the speed limit is 70 km/h or less (licence plate bearing a "C" prefix)

When the owner of a military-type road vehicle applies for the vehicle's registration and the authorization to operate the vehicle on roads where the speed limit is 70 km/h or less, the owner must have received a compliant mechanical inspection certificate within the previous year.

Homologation with regard to the sections of the RRSSRV that deal with the specific standards that apply to military-type vehicles is under the responsibility of the road vehicle inspection agent.

Lights and Signals

Parts and Procedures	Description of the Defect

1.1 Headlights, lights, reflectors and reflective materials
(ss. 15, 18, 19.1, 22.1 and 25)

Notes:

- The headlights, lights and reflectors of a military-type road vehicle are not required to comply with the manufacturer's standards.
- A headlight, light, or reflector of a military-type road vehicle does not comply with the Canadian safety standards for motor vehicles provided for in the *Motor Vehicle Safety Act* (S.C. 1993, c. 16) that apply on the date of the vehicle's manufacture or with SAE International's Standard J759 if its lens is damaged so as to let water in, broken, discoloured, painted over or of the wrong colour or, for example, the two headlights are not of the same type.
- A headlight, light, or reflector of a military-type road vehicle does not comply with the Canadian safety standards for motor vehicles provided for in the *Motor Vehicle Safety Act* (S.C. 1993, c. 16) that apply on date of the vehicle's manufacture or with SAE International's Standard J759 if the lens does not have the following appropriate marking:

General Provisions

A headlight, [1, 2] a light [*] or a reflector [8] of a military-type road vehicle does not comply with the Canadian safety standards for motor vehicles provided for in the *Motor Vehicle Safety Act* (S.C. 1993, c. 16) [W**] that apply on the date of the vehicle's manufacture or with SAE International's Standard J759 [W**] (s. 15).

A headlight [1, 2] or a light [*] of a military-type road vehicle does not light up [HH] with the intensity intended by the manufacturer [W**] of the headlight or light (s. 15).

* Specify which light is concerned.
** Specify in the comments.

Summary Table of Markings in Accordance with SAE International's Standard J759

High beams and low beams	HR, HL or HG
Daytime running lights	DRL
Front parking lights	P
Taillights	T or T2
Side parking lights	P2
Brake lights	S or S2
Turn signal lights	In the front, the following markings are acceptable if the distance between the edge of a headlight and the centre of a turn signal light is: • more than 100 mm: I, I3, I4, I5, I6; • 75 mm to 100 mm: I3, I4, I5; • 60 mm to 75 mm: I4 and I5; • less than 60 mm: I5. In the rear, any lights with the markings I, S or S2 are acceptable.
Backup light	R
Licence plate light	L
Centre high-mounted stop light	U3
Reflector	A

Parts and Procedures	Description of the Defect
e) Turn signal lights	The military-type road vehicle is not equipped [(A)] with an indicator lamp [(5*)] (s. 25). * Specify which indicator lamp in the comments.
f) Hazard lights	The military-type road vehicle is not equipped [(A)] with an indicator lamp [(5*)] (s. 25). * Specify which indicator lamp in the comments.
k) Dashboard lights	The military-type road vehicle is not equipped [(A)] with a lighting device in the dashboard [(16)] that provides sufficient light for the speedometer (s. 22.1).
l) Daytime running lights ***Note:*** Military-type road vehicles manufactured after December 1, 1989 must be equipped with daytime running lights.	The military-type road vehicle is not equipped [(A)] with daytime running lights [(3)] (s. 19.1).

Brakes

Parts and Procedures	Description of the Defect

5.1 Parking brake and service brake (s. 25.1)

c) Warning light

The military-type road vehicle is not equipped (A) with an indicator lamp (5*) (s. 25.1).

* Indicate "for brakes" in the comments.

5.2 Hydraulic brake system (s. 25.1)

e) Warning light

The military-type road vehicle is not equipped (A) with an indicator lamp (5*) or a warning buzzer, (140*) a warning light (5*) or a visual warning device (140*) to indicate a brake system anomaly (s. 25.1).

* Indicate "for brakes" in the comments.

5.6 Working order of the pneumatic brake system (s. 25.1)

c) Low pressure buzzer, light or visual device

The military-type road vehicle is not equipped (A) with an indicator lamp (5*) or a warning buzzer, (140*) a warning light (5*) or a visual warning device (140*) to indicate a brake system anomaly (s. 25.1).

* Indicate "for brakes" in the comments.

Windows and Rearview Mirrors

Parts and Procedures	Description of the Defect

8.1 Windows (s. 58)

Note:

The windows of military-type road vehicles are not required to bear the code prescribed under the *Motor Vehicle Safety Regulations* (C.R.C., c. 1038).

General Provisions

The windshield [256] or a window [259, 260] is not made of safety glass [X**] (s. 58).

Accessories

Parts and Procedures	Description of the Defect

9.1 Sun visor (s. 68.1)

Note:

Check for the presence, condition and working order of the sun visor on the driver's side.

The military-type road vehicle is not equipped [(A)] with a sun visor [(327)] on the driver's side (s. 68.1).

9.4 Heater and defroster (s. 71.1)

Note:

The heating and defrosting system does not have to blow air onto a specific place on the windshield.

The military-type road vehicle is not equipped [(A)] with a heating and defrosting system [(323)] (s. 71.1).

Body

11.8 Air bags and seat belts (ss. 80.1 and 80.2)

Note:

The replacement of a seat belt for the purpose of making the military-type road vehicle compliant with the first paragraph of section 80.1 does not constitute an alteration within the meaning of the first paragraph of section 80. Refer to the details regarding SAE International's Standard J800 in Appendix 5.

The military-type road vehicle is not equipped [(A)] with seat belts [(324)] similar to those of road vehicles of the same type within the meaning of the *Motor Vehicle Safety Regulations*, and of the same date of manufacture (s. 80.1).

A seat belt anchorage [(324*)] of a military-type road vehicle does not comply with the manufacturer's standards or SAE International's Standard J800 (s. 80.2).

* Specify "seat belt anchorage" in the comments.

11.9 Seats and bench seats (s. 80.2)

Note:

In the absence of manufacturer's standards, the seat anchorages must comply with section 5.2.3.8 of SAE International's Standard J800. Refer to the details regarding SAE International's Standard J800 in Appendix 5.

A seat anchorage of a military-type road vehicle does not comply with the manufacturer's standards or section 5.2.3.8 of SAE International's Standard J800 (s. 80.2).

Appendix 5

Details Regarding SAE International's Standard J800

Section 5.2.3.8 of SAE International's Standard J800 2009-02

Reinforcing plates shall be of steel and free from burrs and be rounded on the peripheral edges adjacent to the vehicle. The reinforcing plates shall be at least 1.5 mm (0.06 in) in thickness and at least 2580 mm^2 (4.0 in^2) in area. The distance between any edge of the plate and the edge of the anchorage bolt hole shall be at least 15.2 mm (0.6 in). Corners shall be rounded to a radius of not less than 6.4 mm (0.25 in) or cut so that no corner angle is less than 135 degrees and no side is less than 6.4 mm (0.25 in) in length.

Alphabetical Index

Accelerator **100**
Air bag **131**
Anti-lock brakes **80**

Ball joints **34**
Battery **13**
Bench seat **132**
Body **127**
Brake **73**
Brake chambers **90**
Brake levers **92**
Bumpers **129**

Chassis frame **37**
Chemical fire extinguisher **115**
Clutch control **73**
Coupling plate **43**

Disk brakes **92**
Doors or covers of load space or auxiliary compartments **130**
Drawbar **52**
Drive shaft **40**
Drum brakes **94**

Electric cable **13**
Electromagnetic/Electric brake system **81**
Emergency exit **133**
Engine control **100**
Equipment for transporting persons with disabilities **134**
Exhaust system **103**

Fifth wheel **45**
First-aid kit **115**
Fuel supply **97**
Fuel tank **97**

Headlight alignment **13**
Headlights **7**
Heater system and defroster **113**
Hood **128**
Horn **112**
Hydraulic brakes **75**

Interior equipment **134**
Interior lights **11**

Kingpin **44**

Lifting or support device **41**
Load space **41,131**

MacPherson struts **65**

Neutral safety switch **113**

Odometer **113**

Parking brake **74**
Passenger compartment door **130**
Passenger compartment floor **130**
Pneumatic brake system **82**
Power brakes **78**
Power steering **31**

Rack-and-pinion steering system **27**
Rearview mirror **109**
Reflective strips **20**
Reflectors **7**
Retractable stop sign **114**

Seat **132**
Seat belt **131**
Service brakes **74**
Service and exit door **132**
Speedometer **113**
Sliding bogie **41**
Spring **56**
Steering **23**
Steering box **27**
Steering column **26**
Steering knuckles **33**
Steering linkage **28**
Steering shaft joints **26**
Steering wheel **24**
Sun visor **111**
Suspension **55**

Tilt cab **128**
Tires **117**
Transportation of persons with disabilities **134**
Turntable platform **44**

Underbody **37**

Warning buzzer **111**
Wheels **121**
Wheel bearing **124**
Windows **107**
Windshield washer **112**
Windshield wipers **112**

English/French Glossary

Adjusting sleeve - *Manchon et collets de serrage*
Air spring - *Ballon de suspension*
Axle - *Essieu*

Ball joint - *Rotule*
Beam - *Poutrelle de support de ballon*
Brake chamber - *Récepteur de freinage*
Brake cylinder - *Cylindre de frein*
Brake drum - *Tambour de frein*
Brake lever - *Levier de frein*
Brake shoe - *Segment de frein*

Caliper - *Étrier de frein*
Centre link - *Barre d'accouplement*
Chassis - *Châssis*
Clutch - *Embrayage*
Cross member - *Traverse*

Dolly - *Diabolo (chariot de conversion)*
Drag link - *Bielle d'accouplement*
Drawbar - *Timon d'attelage*
Drawbar eye - *Anneau d'attelage*
Drive shaft - *Arbre de transmission*
Dust shield - *Pare-poussière*

Equalizing beam - *Balancier*

Fast idle - *Ralenti accéléré*
Feeler gauge - *Calibre d'épaisseur*
Fifth wheel - *Sellette d'attelage*
Flange - *Semelle (longeron)*
Frame - *Châssis*

Hub - *Moyeu*

Idler arm - *Bras de renvoi*
Inspection hole - *Fenêtre d'inspection*

Kingpin - *Pivot d'attelage*
Knuckle arm - *Levier de fusée*

Lining - *Garniture*
Lock - *Verrou*
Locking device - *Dispositif de verrouillage*
Lower suspension arm - *Bras de suspension inférieur*

Mounting plate - *Plaque de fixation*

Nut - *Écrou*

Pintle eye - *Anneau d'attelage*
Pintle hook - *Crochet d'attelage*
Pitman arm - *Levier de commande*

Rack-and-pinion steering - *Direction à pignon et crémaillère*
Radius rod - *Bielle de réaction*
Rail - *Longeron*
Rebound clip - *Étrier (suspension)*
Rim - *Jante*
Rim clamp - *Crapaud*
Rim spacer - *Entretoise*
Rim spacer - *Espaceur*

Saddle - *Chaise de suspension*
Sector shaft - *Axe du secteur*
Shackle - *Jumelle*
Shackle bracket - *Support de jumelle*
Shock absorber - *Amortisseur*
Side rail - *Longeron*
Sliding bogie - *Train coulissant*
Spindle - *Fusée*
Spring bracket - *Ancrage de ressort*
Stabilizer bar - *Barre stabilisatrice*
Steering arm - *Levier de direction*
Steering box - *Boîtier de direction*
Steering column - *Colonne de direction*
Steering knuckle - *Pivot de fusée*
Stud - *Goujon*
Suspension travel stop - *Butée de débattement*
Sway bar - *Barre stabilisatrice*
Sway bar link kit - *Biellette de raccordement*

Thickness gauge - *Calibre d'épaisseur*
Tie rod - *Barre d'accouplement*
Tie rod end - *Embout*
Torsion bar - *Barre de torsion*
Torque rod - *Bielle de réaction*

U-bolt clamp - *Bride de fixation*
Universal joint - *Joint universel de colonne*
Upper suspension arm - *Bras de suspension supérieur*

Walking beam - *Balancier*
Web - *Âme (longeron)*

French/English Glossary

Âme (longeron) - *Web*
Amortisseur - *Shock absorber*
Ancrage de ressort - *Spring bracket*
Anneau d'attelage - *Drawbar eye/Pintle eye*
Arbre de transmission - *Drive shaft*
Axe du secteur - *Sector shaft*

Balancier - *Equalizing beam/Walking beam*
Ballon de suspension - *Air spring*
Barre d'accouplement - *Centre link*
Barre d'accouplement - *Tie rod*
Barre de torsion - *Torsion bar*
Barre stabilisatrice - *Stabilizer bar/Sway bar*
Bielle d'accouplement - *Drag link*
Bielle de réaction - *Radius rod*
Bielle de réaction - *Torque rod*
Biellette de raccordement - *Swaybar link kit*
Boîtier de direction - *Steering box*
Bras de renvoi - *Idler arm*
Bras de suspension inférieur - *Lower suspension arm*
Bras de suspension supérieur - *Upper suspension arm*
Bride de fixation - *U-bolt clamp*
Butée de débattement - *Suspension travel stop*

Calibre d'épaisseur - *Feeler gauge/Thickness gauge*
Chaise de suspension - *Saddle*
Châssis - *Frame/Chassis*
Colonne de direction - *Steering column*
Crapaud - *Rim clamp*
Crochet d'attelage - *Pintle hook*
Cylindre de frein - *Brake cylinder*

Diabolo (chariot de conversion) - *Dolly*
Direction à pignon et crémaillère - *Rack-and-pinion steering*
Dispositif de verrouillage - *Locking device*

Écrou - *Nut*
Embout - *Tie rod end*
Embrayage - *Clutch*
Entretoise - *Rim spacer*
Espaceur - *Rim spacer*
Essieu - *Axle*
Étrier (suspension) - *Rebound clip*
Étrier de frein - *Caliper*

Fenêtre d'inspection - *Inspection hole*
Fusée - *Spindle*

Garniture - *Lining*
Goujon - *Stud*

Jante - *Rim*
Joint universel de colonne - *Universal joint*
Jumelle - *Shackle*

Levier de commande - *Pitman arm*
Levier de direction - *Steering arm*
Levier de frein - *Brake lever*
Levier de fusée - *Knuckle arm*
Longeron - *Rail*
Longeron - *Side rail*

Manchon et collets de serrage - *Adjusting sleeve*
Moyeu - *Hub*

Pare-poussière - *Dust shield*
Pivot d'attelage - *Kingpin*
Pivot de fusée - *Steering knuckle*
Plaque de fixation - *Mounting plate*
Poutrelle de support de ballon - *Beam*

Ralenti accéléré - *Fast idle*
Récepteur de freinage - *Brake chamber*
Rotule - *Ball joint*

Segment de frein - *Brake shoe*
Sellette d'attelage - *Fifth wheel*
Semelle (longeron) - *Flange*
Support de jumelle - *Shackle bracket*

Tambour de frein - *Brake drum*
Timon d'attelage - *Drawbar*
Train coulissant - *Sliding bogie*
Traverse - *Cross member*

Verrou - *Lock*

Amendment History

February 2018

PAGES	SECTIONS
5	Table of Contents Key
8	1.1 b) Reflectors
9	1.1 e) Turn signal lights
12	1.1 n) Reflective materials
18	1.4 Required lights and signals
28	2.4 Steering linkage
49	3.8 d) Coupling plate axes
55	4 Suspension - General Provisions
56	4 Suspension - General Provisions 4 a) Suspension system
57	4 a) Suspension system
61	4 a) Suspension system
71	4.1 Component and defect codes for the suspension
73	5 Brakes - General Provisions
80	5.3 Anti-lock brake system
86	5.6 g) Truck tractor protection valve
88	5.7 b) Brake chamber push rod
93	5.8 d) Disc brakes - Working order
95	5.9 c) Drum brakes - Working order
96	5.10 Component and defect codes for the brakes
110	8.3 Component and defect codes for the windows and rearview mirrors
111	9.1 Sun visor
116	9.13 Component and defect codes for the accessories
124	10.2 Wheels
128	11.1 Engine door or hood 11.2 Cab
130	11.6 Passenger compartment floor and steps
131	11.8 Air bags and seat belts
140	Alphabetical Index

April 2018

PAGES	SECTIONS
11	1.1 n) Reflective materials
20	1.4 Required lights and signals

December 2018

PAGES	SECTIONS
6	General Information (Conditions for mechanical inspection)
45	3.8 Fifth wheel
49	3.8 e) Slide supports and stoppers for the sliding fifth wheel
50	3.9 Other coupling devices
73	5 Brakes - General Provisions
74	5.1 Parking brake and service brake
96	5.10 Component and defect codes for the br
106	7.2 Component and defect codes for the exhaust system
113	9.6 Speedometer and odometer
117	10.1 Tires

February 2020

PAGES	SECTIONS
7	1.1 Headlights, lights, reflectors and reflective materials
10	1.1 h) Identification lights
38	3.1 a) Side rails
45	3.8 Fifth wheel
55	4 Suspension - General Provisions
109	8.2 Rearview mirrors
112	9.3 Windshield wipers and washer system
120	10.1 c) Use of the tires

July 2021

PAGES	SECTIONS
38	3.1 a) Side rails
76	5.2.1 b) Fittings
86	5.6 g) Truck tractor protection valve
94	5.9 a) Brake linings and shoes
107	8.1 Windows
119	10.1 b) Tire condition
131	11.8 Air bags and seat belts

July 2022

PAGES	SECTIONS
7	1.1 Headlights, lights, reflectors and reflective materials
10	1.1 h) Identification lights
11-12	1.1 n) Reflective materials
38	3.1 a) Side rails
45	3.8 Fifth wheel
127	11 Body - General provisions

August 2024

PAGES	SECTIONS
4 and 5	Table of Contents Key
6	General Information
7	1.1 Headlights, lights, reflectors and reflective materials
9	1.1 e) Turn signal lights
10	1.1 f) Hazard lights
11	1.1k) Dashboard lights 1.1l) Daytime running lights
47	3.8 b) Jaws and mechanism
50	3.9 Other coupling devices
73	5 Brakes - General Provisions
75	5.1 c) Warning light (where applicable)
77	5.2 e) Warning light
84	5.6 c) Low pressure buzzer, light or visual device
90	5.7 d) Brake chambers
107	8.1 Windows
109	8.2 Rearview mirrors
110	8.3 Component and defect codes for the windows and rearview mirrors
111	9.1 Sun visor
113	9.4 Heater and defroster
124	10.2 c) Wheel bearings
131	11.8 Air bags and seat belts
132	11.9 Seats and bench seats
140 to 146	Appendix 4 Military-Type Road Vehicles
147	Appendix 5 Details Regarding SAE International's Standard J800

Société de l'assurance automobile
Québec

Avec vous,
au cœur de votre sécurité

C-6056-A (24-08)